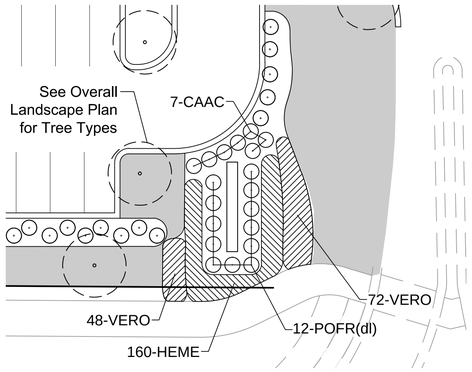

Monument Sign Planting Detail
Scale: 1" = 20'-0"

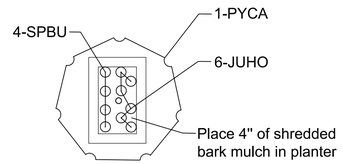

Raised Planter Detail (3 Total)
Scale: 1" = 10'-0"

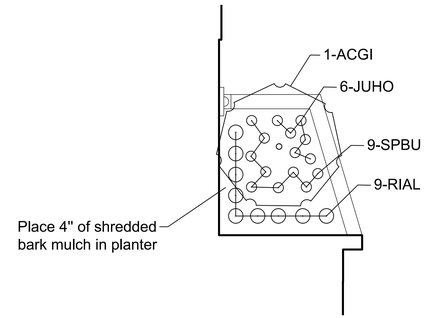

Building - Raised Planter (2 Total)
Scale: 1" = 10'-0"

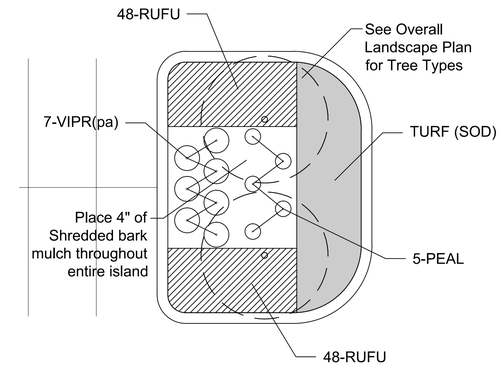

Type "C" Island Planting Detail (3 Total)
Scale: 1" = 10'-0"

Landscape Plant Material Legend

bf	Building Foundation Plant Material
sf	Street Frontage Plant Material
pa	Paved Area Plant Material
dl	Developed Lot Plant Material

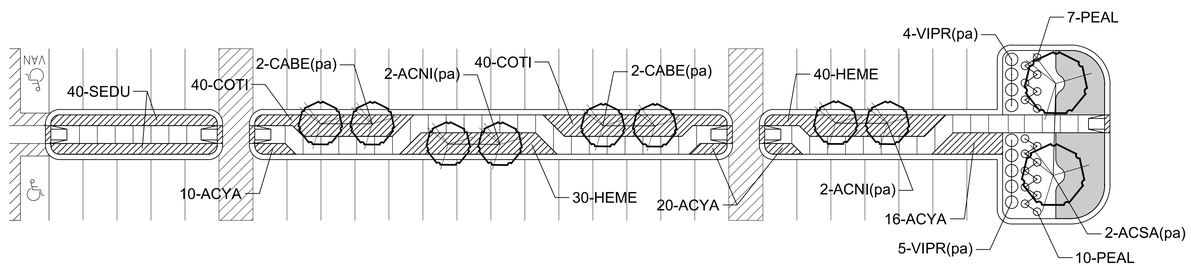

North Long Island Planting Detail
Scale: 1" = 20'-0"

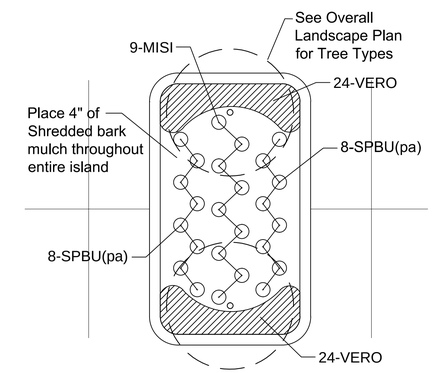

Type "B" Island Planting Detail (7 Total)
Scale: 1" = 10'-0"

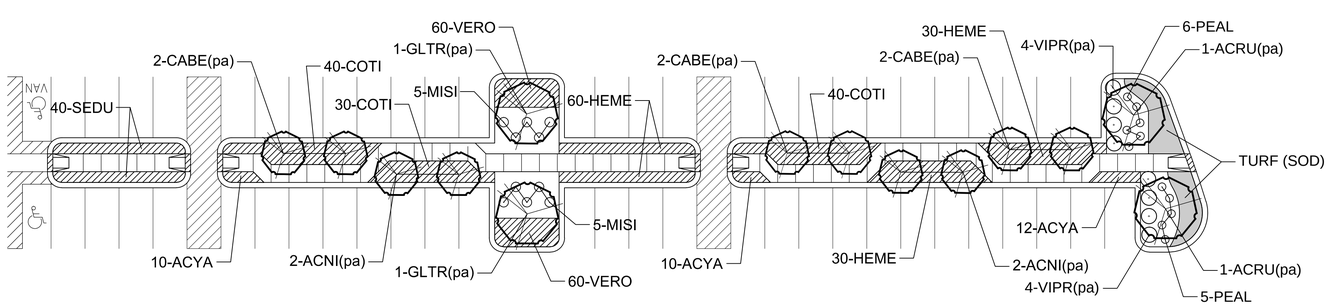

South Long Island Planting Detail
Scale: 1" = 20'-0"

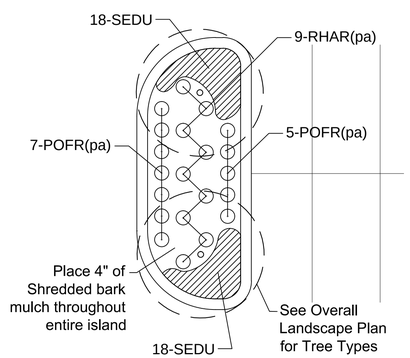

Type "A" Island Planting Detail (7 Total)
Scale: 1" = 10'-0"

DATE	REVISIONS	DRAWN BY
11-5-14	REVISED PER PLAN COMMISSION COMMENTS	DDK
9-17-14	REVISED PER CITY COMMENTS	DDK
8-13-14	REVISED PER CITY COMMENTS	DDK
8-6-14	REVISED PER CLIENT	JBD

Manhard CONSULTING LTD
900 Woodlands Parkway, Vernon Hills, IL 60061 ph:847.634.5550 fx:847.634.0095 manhard.com
Civil Engineers • Surveyors • Water Resource Engineers • Water & Wastewater Engineers
Construction Managers • Environmental Scientists • Landscape Architects • Planners

PROPOSED WAL-MART SUPERCENTER NO. 1176-06
CITY OF STOUGHTON, DANE COUNTY, WISCONSIN
LANDSCAPE ISLAND DETAILS

PROJ. MGR.: TTR
PROJ. ASSOC.: RJS
DRAWN BY: JBD
DATE: 5-29-14
SCALE: 1"=10'

SHEET
27 OF 39
WALSTWI 130435

© 2012 MANHARD CONSULTING, LTD. ALL RIGHTS RESERVED

June 16, 2015 - 13:17 Dwg Name: P:\Walstwi\dwg\Eng\Final Drawings\Plan Set\24-28-LANDSCAPE.dwg Updated By: bwells