MATERIAL STANDARDS

ITEM	BRAND	PRODUCT
FIRE HYDRANTS (TRAFFIC MODEL)	MUELLER SUPER CENTURION WATEROUS PACER	A-423 WB-67
GATE VALVES SPECIFY SIZE NON-RISING STEM, 2" NUT, M.J., OPEN LEFT	MUELLER (SIZE) AMERICAN FLOW CONTROL	A-2360-20L SERIES 2500
VALVE BOXES 3 PIECE	EAST JORDAN TYLER/UNION	SCREW ADJUSTING EXTENSION TYPE
CURB STOPS (SPECIFY SIZE)	MUELLER FORD	300 BALL VALVE BALL VALVE
CORPORATION VALVE (SPECIFY SIZE)	MUELLER FORD	H-15000 FB600 (AWWA/CC THREAD)
MANHOLES/CATCHBASINS/INLETS (SELF-SEALING LID WITH PROPER UTILITY MARKINGS	NEENAH CLOSED LID OPEN LID *1 SWALES AND DITCHES	R-1772 R-2502 C R-4340 B
CURB FRAME & GRATES (BICYCLE SAFE)	NEENAH ROLL/MOUNTABLE CURB B6.12 CURB	R-3501-D2A R-3281A *-3281-AL
WATER SERVICE SADDLES (ALL SERVICE SADDLES SHALL BE DOUBLE STRAP; BRONZE, NYLON COATED OR STAINLESS STEEL)	MUELLER FORD SMITH-BLAIR 3/4" & 1"	DR2S FS 303 # 317
B-BOX (AT LEAST 1 1/4" TOP SECTION) ARCH PATTERN PLUG STYLE LID	FORD MUELLER	EA2 CURB BOX

*1 WHEREVER STORMWATER COULD POSSIBLY ENTER STORM STRUCTURE

MATERIAL STANDARDS
01-01-13 S-MS-MATRL

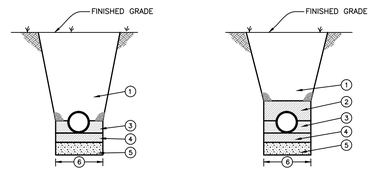

RIGID PIPE
CONCRETE PIPE
VITRIFIED CLAY PIPE
DUCTILE IRON PIPE
STEEL PIPE

FLEXIBLE PIPE
POLYVINYL CHLORIDE (PVC) PIPE
COMPOSITE SEWER PIPE
HIGH DENSITY POLYETHYLENE (HDPE) PIPE
CORRUGATED METAL PIPE

1. MECHANICALLY COMPACTED SELECTED GRANULAR BACKFILL IN 6 INCH LIFTS UNDER OR WITHIN 2 FEET OF ANY PAVEMENT, CURB & GUTTER OR SIDEWALK. MACHINE COMPACTION OF EXCAVATED MATERIAL IN OTHER LOCATIONS WHERE SUITABLE.
2. MECHANICALLY COMPACTED SELECTED GRANULAR BACKFILL IN 6 INCH LIFTS TO 12" ABOVE TOP OF PIPE.
3. RIGID PIPE:
   WELL-COMPACTED HAUNCHING MATERIAL PLACED IN MAXIMUM 6 INCH LIFTS TO SPRING LINE OF PIPE
   FLEXIBLE PIPE:
   WELL-COMPACTED HAUNCHING MATERIAL PLACED IN MAXIMUM 6 INCH LIFTS TO SPRING LINE OF PIPE.
4. 4" WELL-COMPACTED BEDDING MATERIAL
5. UNSUITABLE MATERIAL TO BE REMOVED AND REPLACED WITH GRANULAR FOUNDATION MATERIAL WHERE SOIL CONDITIONS WARRANT
6. TRENCH WIDTH:
   TRENCH DEPTH OF 5 FEET AND LESS, WITHOUT PROTECTION
   OUTSIDE DIAMETER + 12 INCHES ON EACH SIDE OF THE PIPE.
   TRENCH DEPTH OF 5 FEET AND LESS, WITH PROTECTION
   OUTSIDE DIAMETER + 18 INCHES ON EACH SIDE OF THE PIPE.
   TRENCH DEPTH OF GREATER THAN 5 FEET
   OUTSIDE DIAMETER + 18 INCHES ON EACH SIDE OF THE PIPE.

PIPE INSTALLATION DETAIL
01-01-13 S-MS-PID

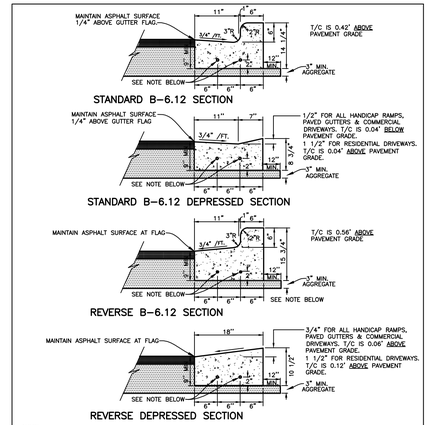

NOTE:
1. EXPANSION JOINTS TO BE LOCATED AT HIGH POINTS, UTILITY STRUCTURES, CURB RETURNS, COLD JOINTS OR 60' MAX. (SEE DETAIL)
2. CONTRACTION JOINTS ARE TO BE SAW CUT 2" DEEP AT 20' INTERVALS MAX.
3. INSTALL 2-#4 DEFORMED BARS X 10'-0" LONG OVER ALL TRENCHES.
4. TRANSITION CURB AND GUTTER AS NECESSARY TO MEET DRAINAGE STRUCTURE FRAME AND GRATE

MODIFIED B-6.12 CURB & GUTTER DETAIL
08-15-13 S-RD-B6CG

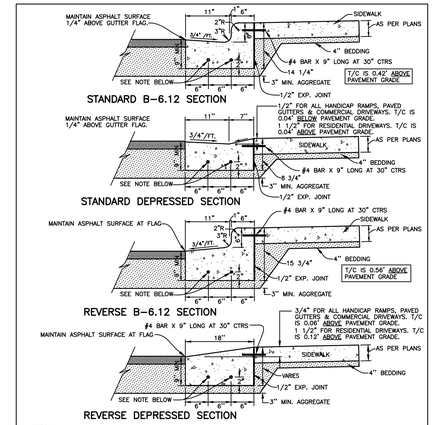

NOTES:
1. EXPANSION JOINTS TO BE LOCATED AT HIGH POINTS, UTILITY STRUCTURES, CURB RETURNS, COLD JOINTS OR 60' MAX. (SEE DETAIL)
2. CONTRACTION JOINTS ARE TO BE SAW CUT 2" DEEP AT 20' INTERVALS MAX.
3. INSTALL 2-#4 DEFORMED BARS X 10'-0" LONG OVER ALL TRENCHES.
4. TRANSITION CURB AND GUTTER AS NECESSARY TO MEET DRAINAGE STRUCTURE FRAME AND GRATE
5. IF CURB & GUTTER & SIDEWALK ARE POURED MONOLITHICALLY, NO #4x9" LONG REINFORCING BARS ARE REQUIRED.

MODIFIED B-6.12 CURB & GUTTER W/ADJACENT SIDEWALK DETAIL
08-15-13 S-RD-B6CG-SW2

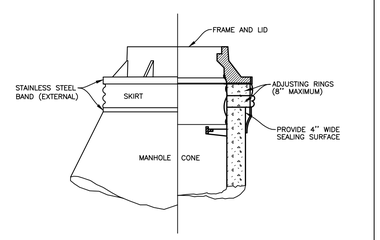

NOTES:
1. ELASTOMERIC BANDS (CHIMNEY SEALS) SHALL BE INSTALLED ON ALL SANITARY SEWAGE SYSTEM MANHOLES.
2. "CRETEX" EXTERNAL OR INTERNAL SEALS ARE RECOMMENDED; OTHER PRODUCTS OR OTHER DESIGN SOLUTIONS SHALL REQUIRE THE APPROVAL OF THE JURISDICTIONAL GOVERNING ENTITY.
3. (ELASTOMERIC BANDS) CHIMNEY SEALS SHALL BE INSTALLED IN ACCORDANCE WITH THE MANUFACTURER'S INSTRUCTIONS.

ELASTOMERIC BAND DETAIL
01-01-13 S-SAN-EB

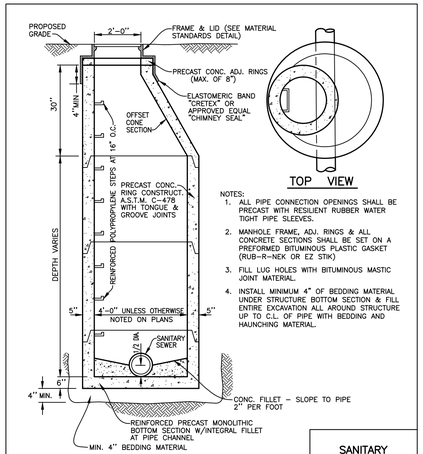

NOTES:
1. ALL PIPE CONNECTION OPENINGS SHALL BE PRECAST WITH RESILIENT RUBBER WATER TIGHT PIPE SLEEVES.
2. MANHOLE FRAME, ADJ. RINGS & ALL CONCRETE SECTIONS SHALL BE SET ON A PREFORMED BITUMINOUS PLASTIC GASKET (RUB-R-NEK OR EZ STIK)
3. FILL LUG HOLES WITH BITUMINOUS MASTIC JOINT MATERIAL.
4. INSTALL MINIMUM 4" OF BEDDING MATERIAL UNDER STRUCTURE BOTTOM SECTION & FILL ENTIRE EXCAVATION ALL AROUND STRUCTURE UP TO C.L. OF PIPE WITH BEDDING AND HAUNCHING MATERIAL.

SANITARY MANHOLE DETAIL
01-01-13 S-SAN-MH

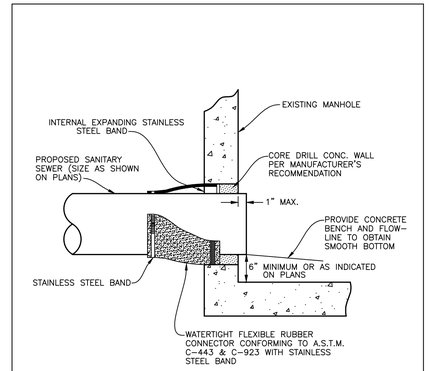

PIPE TO EXIST. SANITARY MANHOLE CONNECTOR DETAIL
01-01-13 S-SAN-PMHC

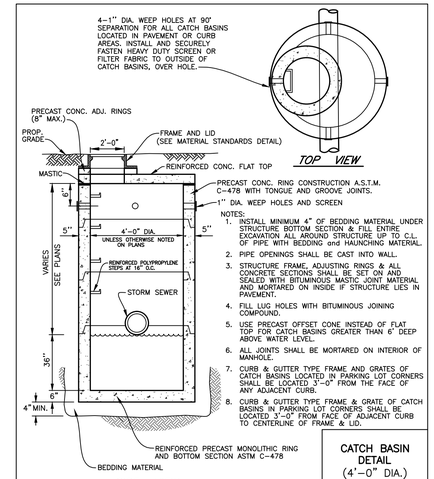

NOTES:
1. INSTALL MINIMUM 4" OF BEDDING MATERIAL UNDER STRUCTURE BOTTOM SECTION & FILL ENTIRE EXCAVATION ALL AROUND STRUCTURE UP TO C.L. OF PIPE WITH BEDDING AND HAUNCHING MATERIAL.
2. PIPE OPENINGS SHALL BE CAST IN WALL.
3. STRUCTURE FRAME, ADJUSTING RINGS, & ALL CONCRETE SECTIONS SHALL BE SET ON AND SEALED WITH BITUMINOUS MASTIC JOINT MATERIAL AND MORTARED ON INSIDE IF STRUCTURE LIES IN PAVEMENT.
4. FILL LUG HOLES WITH BITUMINOUS JOINING COMPOUND.
5. USE PRECAST OFFSET CONE INSTEAD OF FLAT TOP FOR CATCH BASINS GREATER THAN 6' DEEP ABOVE WATER LEVEL.
6. ALL JOINTS SHALL BE MORTARED ON INTERIOR OF MANHOLE.
7. CURB & GUTTER TYPE FRAME AND GRATES OF CATCH BASINS LOCATED IN PARKING LOT CORNERS SHALL BE LOCATED 3'-0" FROM THE FACE OF ANY ADJACENT CURB.
8. CURB & GUTTER TYPE FRAME & GRATE OF CATCH BASINS IN PARKING LOT CORNERS SHALL BE LOCATED 3'-0" FROM FACE OF ADJACENT CURB TO CENTERLINE OF FRAME & LID.

CATCH BASIN DETAIL (4'-0" DIA.)
01-01-13 S-ST-CB4

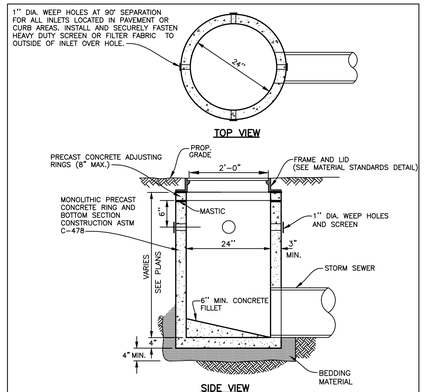

NOTES:
1. INSTALL MINIMUM 4" OF BEDDING MATERIAL UNDER STRUCTURE BOTTOM SECTION & FILL ENTIRE EXCAVATION ALL AROUND STRUCTURE UP TO C.L. OF PIPE WITH BEDDING AND HAUNCHING MATERIAL.
2. PIPE OPENINGS SHALL BE CAST IN TO WALL.
3. STRUCTURE FRAME, ADJUSTING RINGS, AND ALL CONCRETE SECTIONS SHALL BE SET ON AND SEALED WITH BITUMINOUS MASTIC JOINT MATERIAL AND MORTARED ON INSIDE IF STRUCTURE LIES IN PAVEMENT.
4. FILL LUG HOLES WITH BITUMINOUS JOINING COMPOUND.
5. CURB & GUTTER TYPE FRAME AND GRATES OF INLETS IN PARKING LOT CORNERS SHALL BE LOCATED 3'-0" FROM THE FACE OF ADJACENT CURB TO CENTERLINE OF FRAME & LID.

INLET DETAIL
01-01-13 S-ST-INL

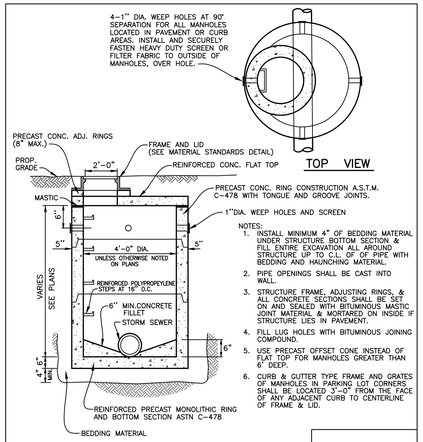

NOTES:
1. INSTALL MINIMUM 4" OF BEDDING MATERIAL UNDER STRUCTURE BOTTOM SECTION & FILL ENTIRE EXCAVATION ALL AROUND STRUCTURE UP TO C.L. OF PIPE WITH BEDDING AND HAUNCHING MATERIAL.
2. PIPE OPENINGS SHALL BE CAST INTO WALL.
3. STRUCTURE FRAME, ADJUSTING RINGS, & ALL CONCRETE SECTIONS SHALL BE SET ON AND SEALED WITH BITUMINOUS MASTIC JOINT MATERIAL & MORTARED ON INSIDE IF STRUCTURE LIES IN PAVEMENT.
4. FILL LUG HOLES WITH BITUMINOUS JOINING COMPOUND.
5. USE PRECAST OFFSET CONE INSTEAD OF FLAT TOP FOR MANHOLES GREATER THAN 6' DEEP.
6. CURB & GUTTER TYPE FRAME AND GRATES OF MANHOLES IN PARKING LOT CORNERS SHALL BE LOCATED 3'-0" FROM THE FACE OF ANY ADJACENT CURB TO CENTERLINE OF FRAME & LID.

STORM MANHOLE DETAIL
01-01-13 S-ST-MH

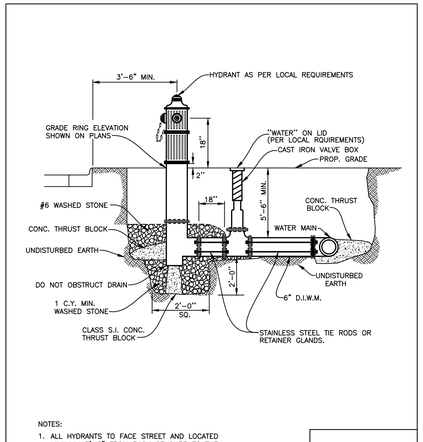

NOTES:
1. ALL HYDRANTS TO FACE STREET AND LOCATED MINIMUM 3'-6" FROM BACK OF CURB TO THE CENTERLINE OF HYDRANT.
2. HYDRANTS TO BE PAINTED IN ACCORDANCE WITH LOCAL REQUIREMENTS.

FIRE HYDRANT DETAIL
01-01-13 S-WM-HYD

STANDARD SPECIFICATIONS FOR SEWER AND WATER CONSTRUCTION IN WISCONSIN, LATEST EDITION.

PROTECTION OF WATER MAIN AND WATER SERVICE LINES

GENERAL

Water mains and water service lines shall be protected from sanitary sewers, storm sewers, combined sewers, house sewer service connections and drains as follows:

HORIZONTAL SEPARATION – WATER MAINS AND SEWERS

(1.) Water mains shall be located at least eight (8) feet horizontally from any existing or proposed drain, storm sewer, sanitary sewer, combined sewer or sewer service connection.

(2.) Water mains may be located closer than eight (8) feet to a sewer line when:

(a) local conditions prevent a lateral separation of eight (8) feet and

(b) the water main invert is at least eighteen (18) inches above the crown of the sewer; and

(c) the water main is either in a separate trench or in the same trench on an undisturbed earth shelf located to one side of the sewer.

(3.) When it is impossible to meet (1) or (2) above, both the water main and drain or sewer shall be constructed of slip-on or mechanical joint cast or ductile iron pipe, prestressed concrete pipe, or PVC pipe equivalent to water main standards of construction. The drain or sewer shall be pressure tested to the maximum expected surcharge head before backfilling.

(4.) Polyethylene tube is required on all ductile iron pipe installed.

WATER AND SEWER SEPARATION REQUIREMENTS (HORIZONTAL SEPARATION)
5-28-14 WALSTWI

STANDARD SPECIFICATIONS FOR SEWER AND WATER CONSTRUCTION IN WISCONSIN, LATEST EDITION.

VERTICAL SEPARATION – WATER MAINS AND SEWERS

(1.) A water main shall be separated from a sewer so that its invert is a minimum of eighteen (18) inches above the crown of the drain or sewer whenever water mains cross storm sewers, sanitary sewers or sewer service connections. The vertical separation shall be maintained for that portion of the water main located within eight (8) feet horizontally of any sewer or drain crossed. A length of water main pipe shall be centered over the sewer to be crossed with joints equidistant from the sewer or drain.

(2.) Both the water main and sewer shall be constructed of slip-on or mechanical joint cast or ductile iron pipe, prestressed concrete pipe, or PVC pipe equivalent to water main standards of construction when:

(a) it is impossible to obtain the proper vertical separation as described in (1) above; or

(b) the water main passes under a sewer or drain.

NOTES:

(1) CASING OF EITHER THE WATER MAIN OR SEWER PIPE IS ACCEPTABLE IN LIEU OF PLACING THE SEWER IN WATER MAIN EQUIVALENT PIPE.

(2) THE STORM SEWER CAN BE CONSTRUCTED WITH REINFORCED CONCRETE PIPE USING FLEXIBLE GASKETS JOINTS, (ASTM C361 C443) INSTEAD OF CONSTRUCTING THE STORM SEWER WITH WATER MAIN EQUIVALENT PIPE OR CASING PIPE.

(3.) A vertical separation of eighteen (18) inches between the invert of the sewer or drain and the crown of the water main shall be maintained where a water main crosses under a sewer. Support the sewer or drain lines to prevent settling and breaking the main, as shown on the Plans or as approved by the ENGINEER.

(4.) Construction shall extend on each side of the crossing until the perpendicular distance from the water main to the sewer or drain line is at least eight (8) feet.

WATER AND SEWER SEPARATION REQUIREMENTS (VERTICAL SEPARATION)
5-28-14 WALSTWI

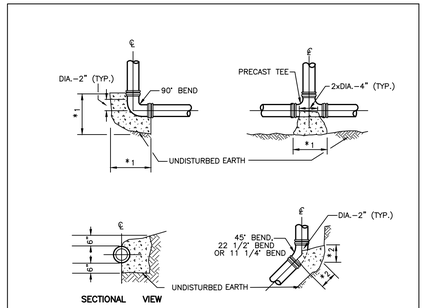

NOTES:
1. BLOCKING SHALL BE APPLIED FOR ALL TEES, PLUG, CAPS, & 11 1/4° OR MORE BENDS BEARING CAPACITY OF 2000 P.S.F.
2. THRUST BLOCKS TO BE CLASS "B" CONCRETE.
3. BEARING AREAS OF UNDISTURBED EARTH SHALL HAVE A MINIMUN ALLOWABLE BEARING CAPACITY OF 2000 P.S.F.
4. BEARING AREA OF SOIL BASED ON 65 P.S.I. WATER MAIN PRESSURE.

*1. 1'-9" MIN. FOR 12" OR SMALLER DIA.
2'-9" MIN. FOR 16" DIA.
4'-0" MIN. FOR 24" DIA.

*2. 1'-3" MIN. FOR 12" OR SMALLER DIA.
2'-0" MIN. FOR 16" DIA.
2'-10" MIN. FOR 20" DIA.

THRUST BLOCKING DETAIL
01-01-13 S-WM-TB

DATE	REVISIONS	DRAWN BY
12-18-14	REVISED PER MANHARD REVIEW	AS
8-13-14	REVISED PER CITY COMMENTS	DDK

Manhard CONSULTING LTD
800 Woodlands Parkway, Vernon Hills, IL 60061 ph847 634-5550 fx847 634-0095 manhard.com
Civil Engineers • Surveyors • Water Resource Engineers • Water & Wastewater Engineers
Construction Managers • Environmental Scientists • Landscape Architects • Planners

PROPOSED WAL-MART SUPERCENTER NO. 1176-06
CITY OF STOUGHTON, DANE COUNTY, WISCONSIN
CONSTRUCTION DETAILS

PROJ. MGR.: TTR
PROJ. ASSOC.: RJS
DRAWN BY: AS
DATE: 5-29-14
SCALE: N.T.S.

SHEET 34 OF 39
WALSTWI 130435

© 2012 MANHARD CONSULTING, LTD. ALL RIGHTS RESERVED

December 18, 2014 - 16:19 Dwg Name: P:\Walstwi\Cad\Eng\Final Drawings\Plan Set\34-TO-DETAILS.dwg Updated By: jamesbell