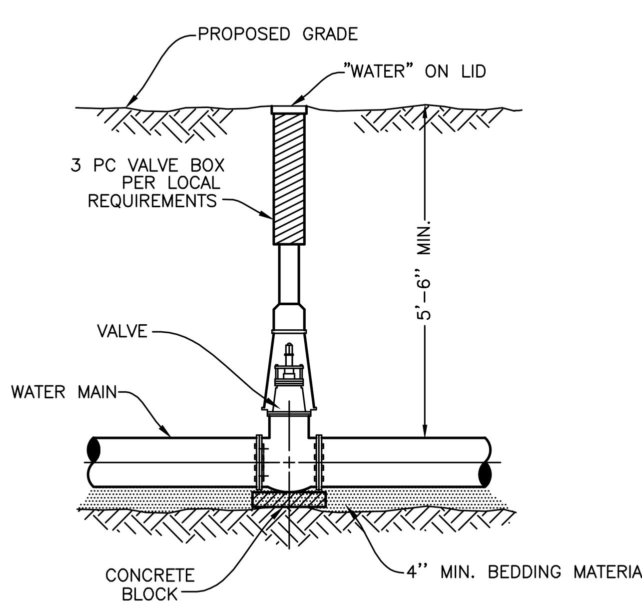

VALVE BOX DETAIL

01-01-13 S-WM-VB

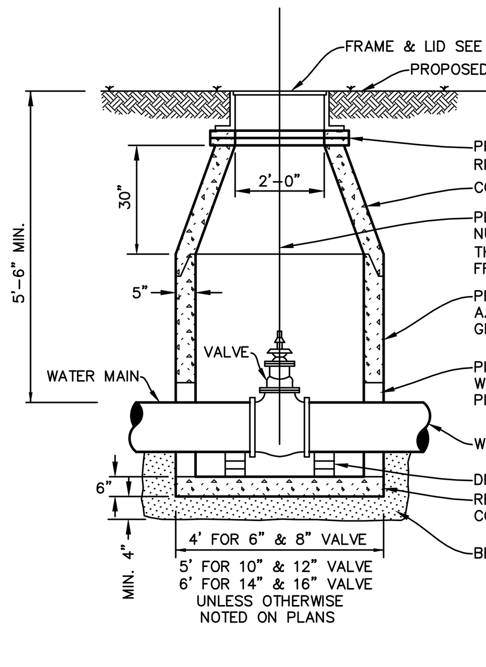

NOTES:

1. INSTALL MINIMUM 4" OF BEDDING MATERIAL UNDER STRUCTURE BOTTOM SECTION AND FILL ENTIRE EXCAVATION ALL AROUND STRUCTURE UP TO C.L. OF PIPE WITH BEDDING AND HAUNCHING MATERIAL.
2. PIPE OPENINGS SHALL BE CAST INTO WALL WITH RESILIENT RUBBER WATER TIGHT PIPE SLEEVES.
3. STRUCTURE FRAME, ADJUSTING RINGS AND ALL CONCRETE SECTIONS SHALL BE SET ON AND SEALED WITH BITUMINOUS MASTIC JOINT MATERIAL.
4. FILL LUG HOLES WITH BITUMINOUS JOINING COMPOUND.

VALVE VAULT DETAIL

01-01-13 S-WM-VV

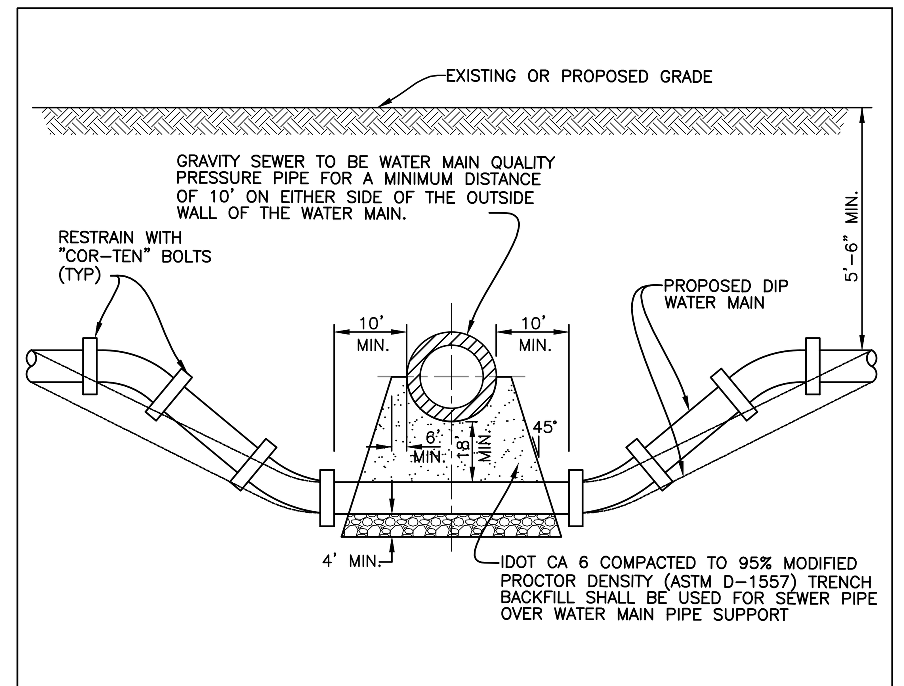

1. HORIZONTAL AND VERTICAL SEPARATION BETWEEN WATER MAINS AND SEWER SHALL COMPLY WITH IEPA REQUIREMENTS.
2. CONTRACTOR MAY BEND WATER MAIN PIPE UNIFORMLY UNDER SEWERS WITHOUT USING FITTINGS. PROVIDED THAT JOINT DEFLECTION DOES NOT EXCEED 5 DEGREES PER JOINT FOR PIPE UNDER 14" IN DIAMETER AND 3 DEGREES PER JOINT FOR PIPE 14" AND OVER IN DIAMETER. IF FITTINGS ARE USED, CONTINUOUS STRAPPING WITH RODS, STRAPS, NUTS AND BOLTS BELOW NORMAL WATER MAIN DEPTH ARE REQUIRED, OR RETAINER GLANDS MAY BE USED IN LIEU OF STRAPPING.

WATER MAIN LOWERING DETAIL

07-01-12 S-WM-XING

FGP-0003

SPECIFIER CHART

MODEL NUMBER	INLET ID (Ø INCHES)	GRATE OD (Ø INCHES)	SOLIDS STORAGE CAPACITY (CU FT)	FILTERED FLOW (CFS)	TOTAL BYPASS CAPACITY (CFS)
FGP-RF15F	16	18	0.3	0.4	2.8
FGP-RF18F	18	20	0.8	0.7	4.7
FGP-RF20F	21	23	0.8	0.7	4.7
FGP-RF21F	22	23.5	0.8	0.7	4.7
FGP-RF22F	23	24	0.8	0.7	4.7
FGP-RF24F	24	26	0.8	0.7	4.7
FGP-RF30F	30	32	2.2	1.5	6.1
FGP-RF36F	36	39	3.6	2.0	8.1

DIMENSIONS SHOWN ARE APPROXIMATE – SUBMIT EXACT MEASUREMENTS WHEN ORDERING – SEE NOTE 9.

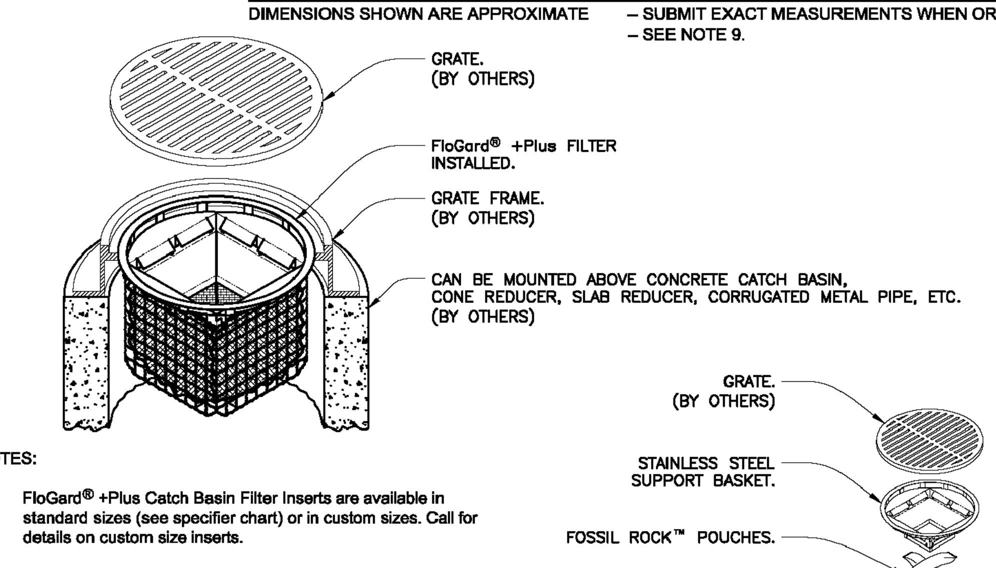

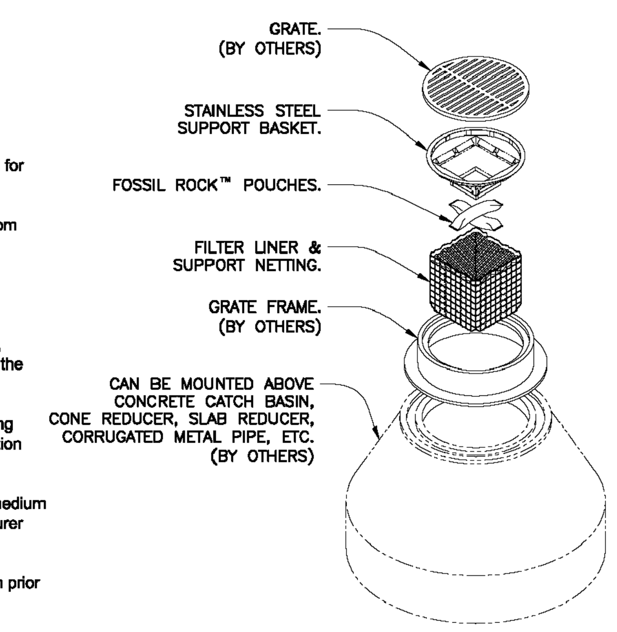

EXPLODED VIEW
SCALE: 1/2

NOTES:

1. FloGard® +Plus Catch Basin Filter Inserts are available in standard sizes (see specifier chart) or in custom sizes. Call for details on custom size inserts.
2. Standard height is 20 inches from top of filter frame to bottom of support netting. Shallow depths available upon request.
3. Filter support frame shall be constructed from stainless steel Type 304.
4. Filter liner shall be constructed from durable polypropylene, woven, monofilament, geotextile. Filter liner shall not allow the retention of water between storm events.
5. Filter inserts are supplied with "clip-in" filter pouches utilizing FOSSIL ROCK™ filter medium for the collection and retention of petroleum hydrocarbons (oils & greases).
6. FloGard®+PLUS filter inserts and FOSSIL ROCK™ filter medium pouches must be maintained in accordance with manufacturer recommendations.
7. Storage capacity reflects 80% of maximum solids collection prior to impeding filtering bypass.
8. Filtered flow rate includes a safety factor of two.
9. FloGard® measurement charts available upon request.

TITLE **FloGard® +PLUS**
CATCH BASIN FILTER INSERT
(CIRCULAR FRAME MOUNT)
FLAT GRATED INLET

KriStar Enterprises, Inc.
360 Sutton Place, Santa Rosa, CA 95407
Ph: 800.579.8819, Fax: 707.524.8186, www.kristar.com

DRAWING NO.	REV	ECO	DATE	
FGP-0003	B	0059 JPR 12/30/08	JPR 4/4/07	SHEET 1 OF 1

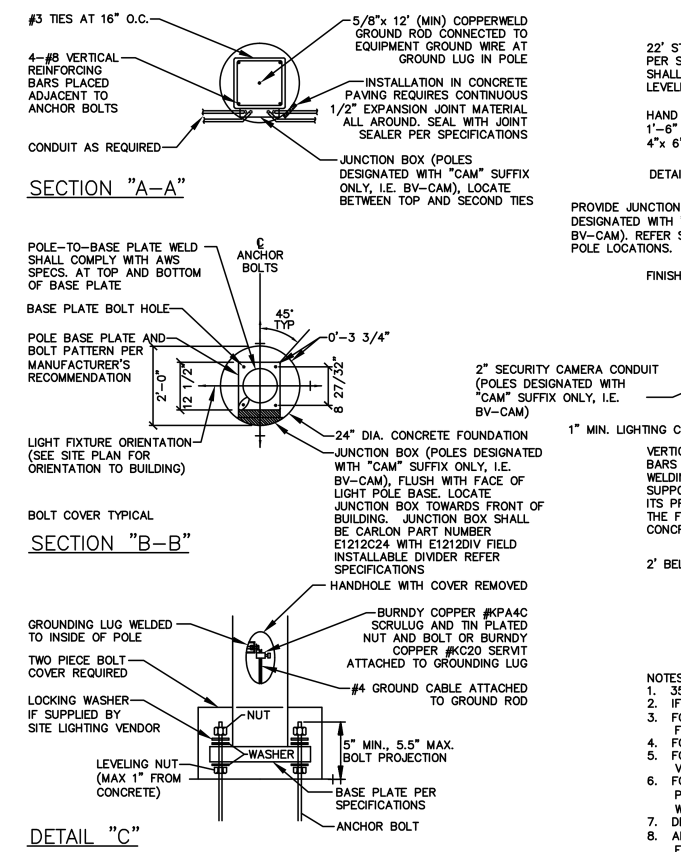

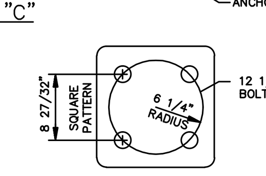

TYPICAL ANCHOR BOLT SPACING

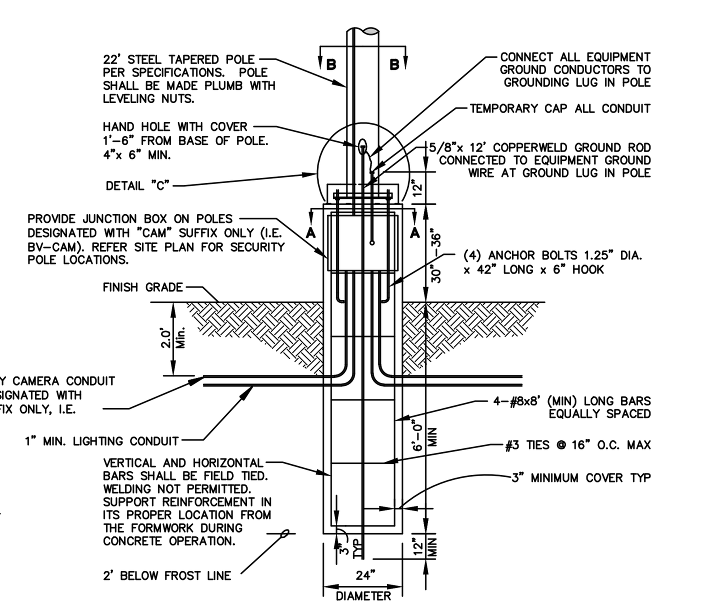

NOTES:

1. 3500 PSI MIN. 28 DAY COMPRESSIVE STRENGTH CONCRETE WITH GRADE 60 REINFORCING STEEL
2. IF WATER IS PRESENT IN HOLE, REMOVE BEFORE POURING CONCRETE.
3. FOUNDATION EXCAVATION SHALL BE BY 24" AUGER IN UNDISTURBED OR PROPERLY COMPACTED FILL PER SPECIFICATIONS.
4. FOUNDATION SHALL HAVE A MINIMUM ALLOWABLE END BEARING OF 2000 PSF.
5. FOUNDATION HAS BEEN DESIGNED FOR A COHESIVE SOIL BASED ON A MINIMUM COHESIVE VALUE OF 1000 PSF.
6. FOUNDATION HAS BEEN DESIGNED FOR A GRANULAR SOIL BASED ON A MINIMUM LATERAL SOIL PRESSURE OF 1000 PSF, UTILIZING AASHTO FIGURE 1.8.2C(4) OF "EMBEDMENT OF POSTS WITH OVERTURNING LOADS".
7. DETAIL FOR 22' POLE WITH MAX. FIXTURE EPA 4.6 SQ.FT.
8. ALL LIGHT POLE BASE FOUNDATIONS SHALL BE CAST-IN-PLACE. PRE-CAST LIGHT POLE BASE FOUNDATIONS ARE NOT ACCEPTABLE.

TYPICAL LIGHTING POLE BASE DETAIL
N.T.S.

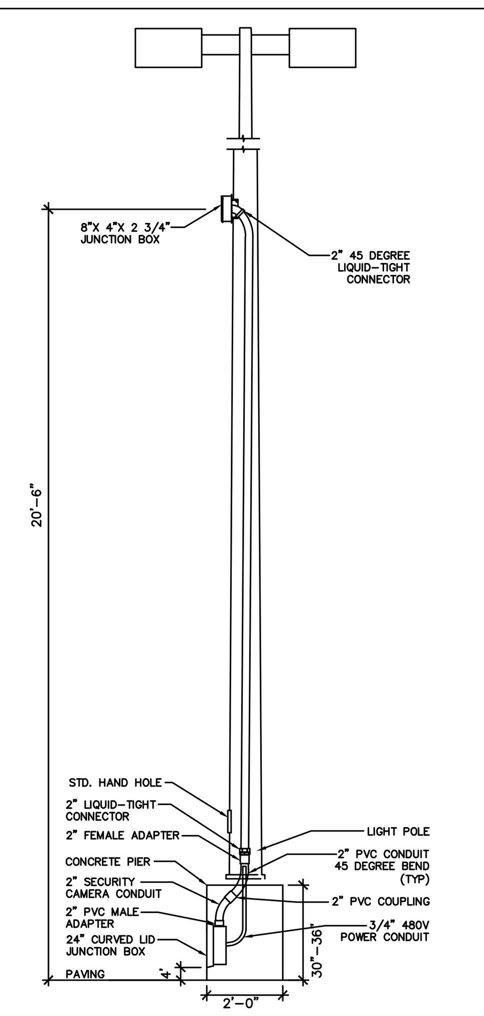

POLE MOUNTED CAMERA DETAIL

NOTE:
ONLY FOR POLE LOCATIONS DESIGNATED WITH "CAM" SUFFIX ONLY, I.E. BV-CAM. CAMERAS AND WIRING BY OTHERS.

TYPICAL LIGHTING POLE BASE DETAIL | 10/02/07

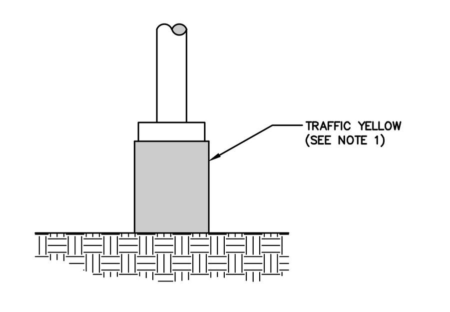

ELEVATION

NOTES:
1. EXPOSED CONCRETE SHALL BE PAINTED TRAFFIC YELLOW.

WAL-MART LIGHT BASE DETAIL
N.T.S.

10/02/07 | WAL-MART LIGHT BASE

DO NOT PAINT THE CONCRETE LIGHT POLE BASE (SAM'S CLUB ONLY)

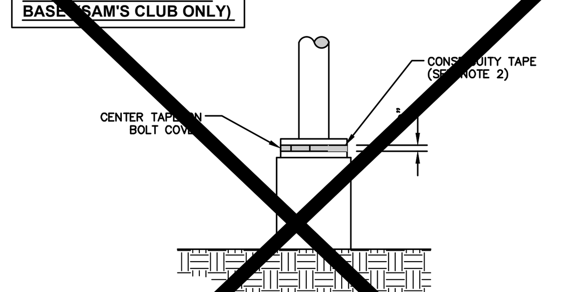

ELEVATION

NOTES:
1. DO NOT PAINT POLE BASE.
2. CONSPICUITY TAPE SHALL BE "DOT C2 APPROVED" ALTERNATING RED/WHITE WITH EACH COLOR AT A MINIMUM 2" HIGH AND 6" TO 18" LONG. ONE COLOR CANNOT EXCEED 2/3 OF THE TOTAL SEGMENT.

SAM'S LIGHT BASE DETAIL
N.T.S.

10/02/07 | SAM'S LIGHT BASE

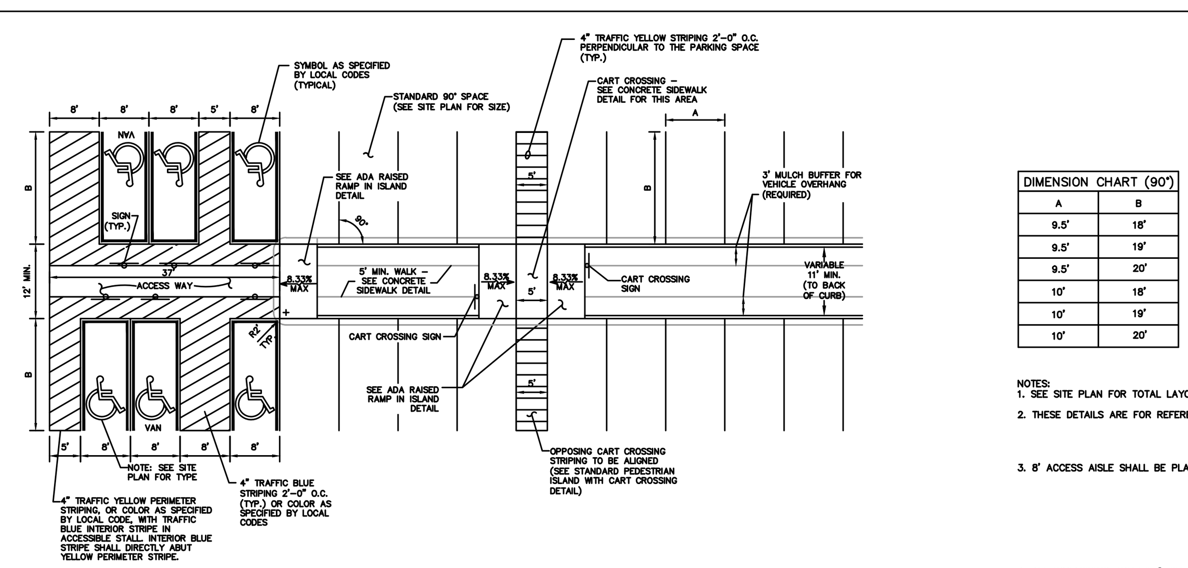

90° STRIPING DETAIL

DIMENSION CHART (90°)	
A	B
9.5'	18'
9.5'	19'
9.5'	20'
10'	18'
10'	19'
10'	20'

NOTES:
1. SEE SITE PLAN FOR TOTAL LAYOUT
2. THESE DETAILS ARE FOR REFERENCE AND DIMENSION CONTROL ONLY
3. 8' ACCESS AISLE SHALL BE PLACED ON THE PASSENGER SIDE OF A VAN ACCESSIBLE SPACE
4. ALL DIMENSIONS ARE TO ℄ OF STRIPE UNLESS OTHERWISE INDICATED

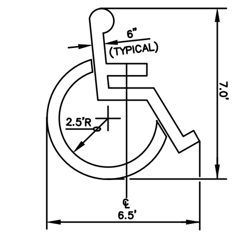

ACCESSIBLE PARKING SYMBOL
LOCATE AT EDGE OF PARKING SPACE UNLESS ACCOMPANIED BY "VAN" LETTERING

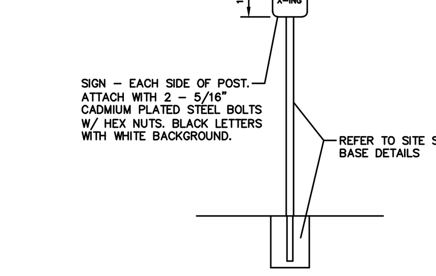

CART CROSSING SIGN
N.T.S.

STANDARD PEDESTRIAN ISLAND W/ CART CROSSING

DTSPIPS | 12/06/07

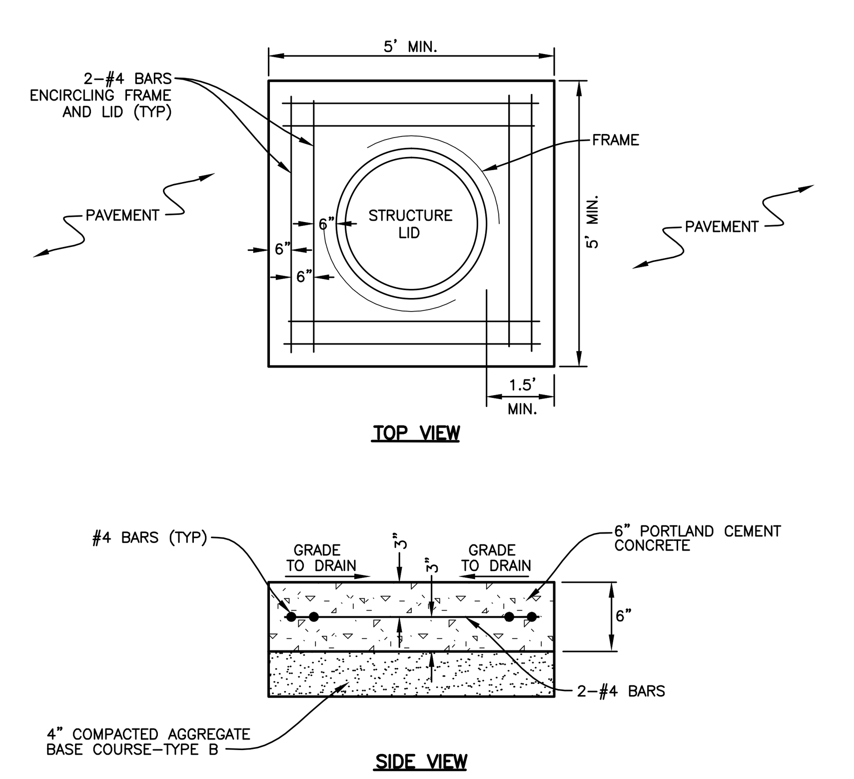

STORM DRAINAGE STRUCTURE CONCRETE COLLAR DETAIL

5-29-14 WALSTWI

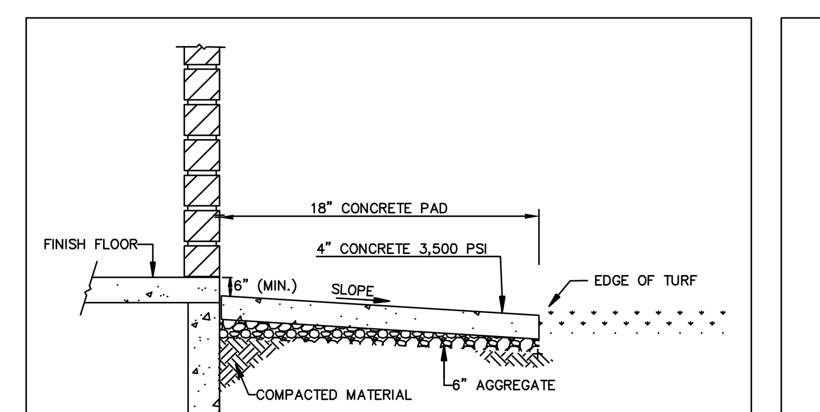

VEGETATION FREE ZONE
N.T.S.

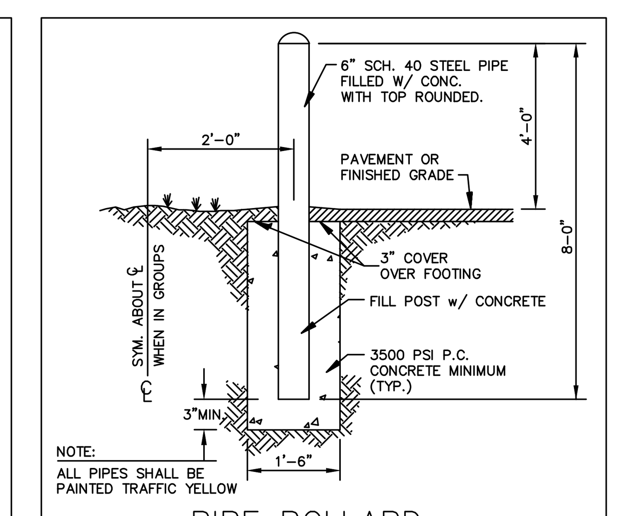

NOTE:
ALL PIPES SHALL BE PAINTED TRAFFIC YELLOW

PIPE BOLLARD
N.T.S.

DTGRDPST | 08/17/09

DATE	REVISIONS	DRAWN BY
12-18-14	REVISED PER MANHARD REVIEW	AS
8-13-14	REVISED PER CITY COMMENTS	DDK

Manhard CONSULTING LTD
900 Woodlands Parkway, Vernon Hills, IL 60061 ph:847.634.5550 fx:847.634.0095 manhard.com
Civil Engineers • Surveyors • Water Resource Engineers • Water & Wastewater Engineers
Construction Managers • Environmental Scientists • Landscape Architects • Planners

PROPOSED WAL-MART SUPERCENTER NO. 1176-06
CITY OF STOUGHTON, DANE COUNTY, WISCONSIN
CONSTRUCTION DETAILS

PROJ. MGR.: TTR
PROJ. ASSOC.: RJS
DRAWN BY: AS
DATE: 5-29-14
SCALE: N.T.S.

SHEET 35 OF 39

WALSTWI 130435

© 2012 MANHARD CONSULTING, LTD. ALL RIGHTS RESERVED

December 18, 2014 – 16:19 Dwg Name: P:\Walstwi\dwg\Eng\Final Drawings\Plan Set\34-39-DETAILS.dwg Updated By: jcampbell