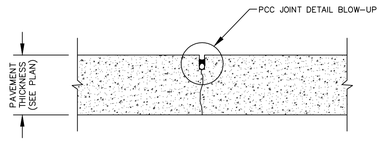

NOTE:
1. SEE PLAN FOR JOINT SPACING.

CONTRACTION JOINT

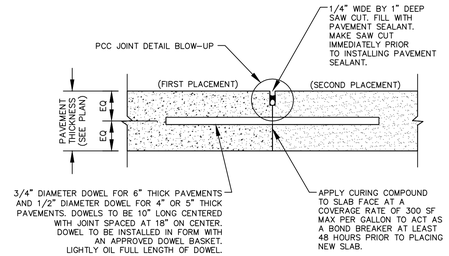

CONSTRUCTION JOINT

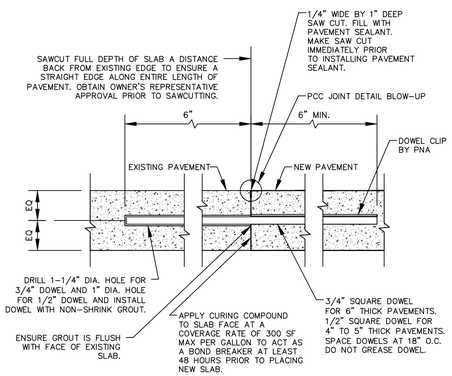

CONSTRUCTION JOINT TO EXISTING PAVEMENT

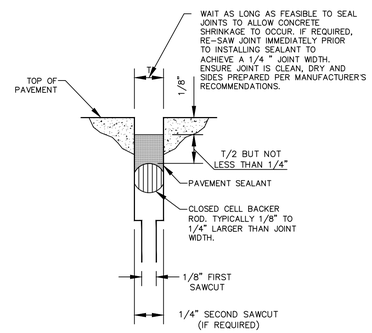

NOTES:
1. ENSURE JOINTS ARE CLEAN AND DRY PRIOR TO THE APPLICATION OF THE JOINT SEALANT.
2. INSTALL CLOSED CELL BACKER ROD AFTER JOINTS HAVE BEEN CLEANED AND DRIED IN ACCORDANCE WITH SEALANT MANUFACTURER'S REQUIREMENTS.
3. INSTALL BACKER TOD AT CONSISTENT AND UNIFORM DEPTH.
4. JOINT SEALANT APPLICATION SHALL BE IN STRICT COMPLIANCE WITH SEALANT MANUFACTURER'S REQUIREMENTS.

PCC JOINT DETAIL BLOW-UP (TYP.)

CONCRETE JOINT DETAILS
N.T.S.

DTCONJNT	03-02-12	

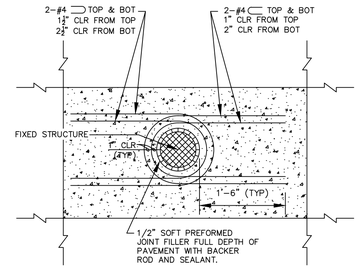

TYPICAL ROUND FIXED STRUCTURE PLAN DETAIL

USES: MANHOLES, LIGHT POLE BASES AND BOLLARDS

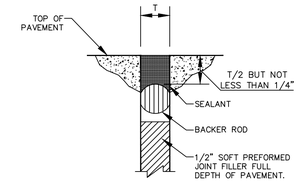

BACKER ROD AND SEALANT SECTION AT FIXED STRUCTURE

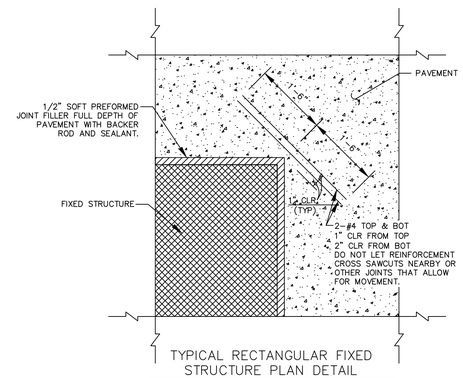

TYPICAL RECTANGULAR FIXED STRUCTURE PLAN DETAIL

USES: BUILDINGS, RETAINING WALLS/DOCK WALLS AND DROP INLETS

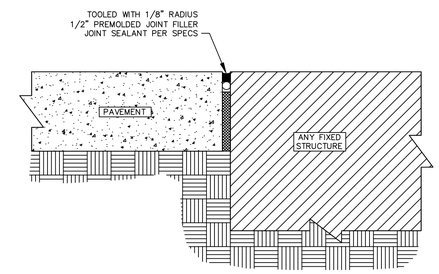

ISOLATION JOINT

NOTES:

ISOLATION JOINT TO BE USED FOR FIXED STRUCTURES SUCH AS BUILDINGS, RETAINING WALLS/DOCK WALLS, DROP INLETS, MANHOLES, LIGHT POLE BASES AND BOLLARDS.

PAVEMENT IS NOT CONSIDERED A FIXED STRUCTURE.

ISOLATION JOINT DETAILS
N.T.S.

DTISOJNT	12-04-08	

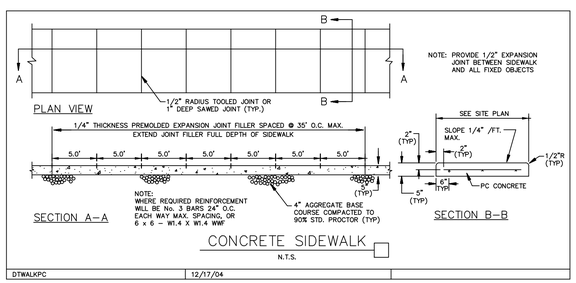

CONCRETE SIDEWALK
N.T.S.

DTWALKPC	12/17/04	

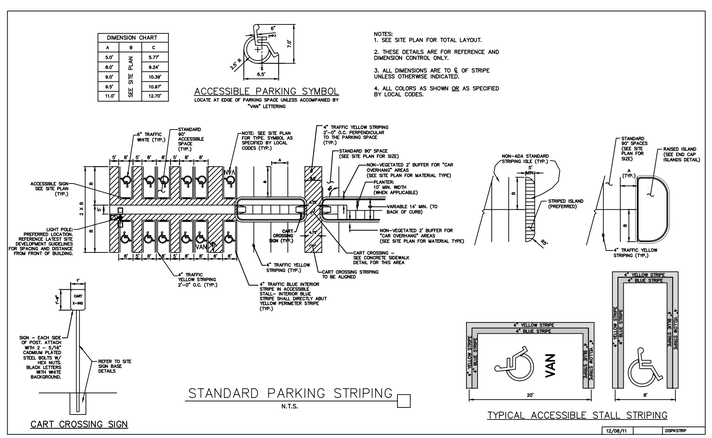

CART CROSSING SIGN

STANDARD PARKING STRIPING
N.T.S.

TYPICAL ACCESSIBLE STALL STRIPING

12/06/11	DSPKSTRP

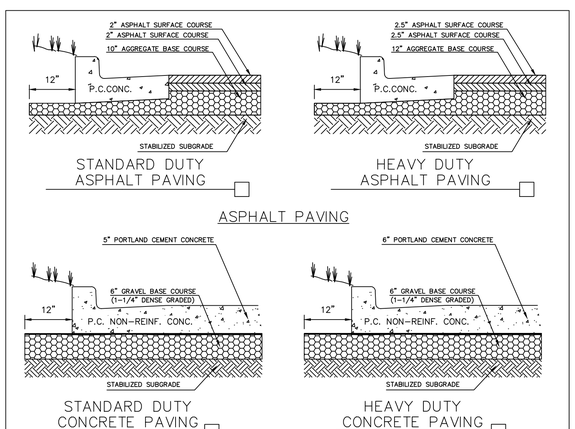

NOTES:
1. SUBGRADE DESIGN CBR VALUE = 4
2. PAVEMENT CONSTRUCTION TO BE IN CONFORMANCE WITH STATE OF WISCONSIN STANDARD SPECIFICATIONS FOR HIGHWAY AND STRUCTURE CONSTRUCTION, LATEST DATE.

PC CONCRETE PAVING
PAVING DETAILS
N.T.S.

DTPAVING	12/04/08	

DATE	REVISIONS	DRAWN BY
8-13-14	REVISED PER CITY COMMENTS	DDK

Manhard CONSULTING LTD
800 Woodlands Parkway, Vernon Hills, IL 60061 ph847.634.5550 fx847.634.0095 manhard.com
Civil Engineers • Surveyors • Water Resource Engineers • Water & Wastewater Engineers
Construction Managers • Environmental Scientists • Landscape Architects • Planners

PROPOSED WAL-MART SUPERCENTER NO. 1176-06
CITY OF STOUGHTON, DANE COUNTY, WISCONSIN
CONSTRUCTION DETAILS

PROJ. MGR.: TTR
PROJ. ASSOC.: RJS
DRAWN BY: AS
DATE: 5-29-14
SCALE: N.T.S.

SHEET 36 OF 39
WALSTWI 130435

© 2012 MANHARD CONSULTING, LTD. ALL RIGHTS RESERVED

December 18, 2014 - 16:19 Dwg Name: P:\Winter\Jobs\Eng\Final Drawings\Plan Set\34-to-DETAILS.dwg Updated By: kamphell