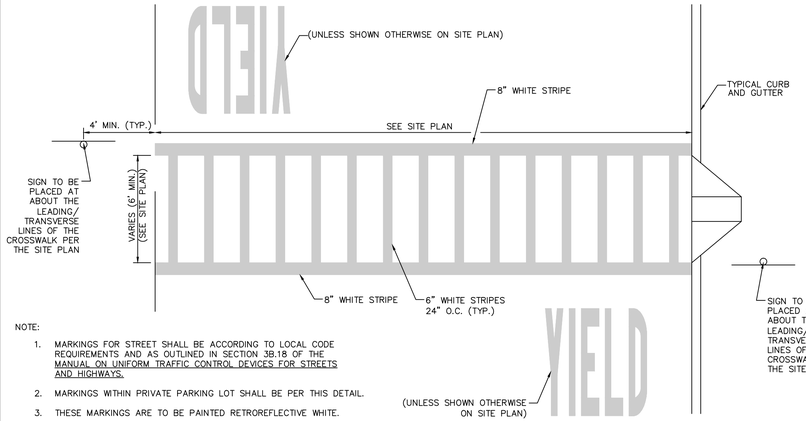

NOTE:

1. MARKINGS FOR STREET SHALL BE ACCORDING TO LOCAL CODE REQUIREMENTS AND AS OUTLINED IN SECTION 3B.18 OF THE MANUAL ON UNIFORM TRAFFIC CONTROL DEVICES FOR STREETS AND HIGHWAYS.
2. MARKINGS WITHIN PRIVATE PARKING LOT SHALL BE PER THIS DETAIL.
3. THESE MARKINGS ARE TO BE PAINTED RETROREFLECTIVE WHITE.

CROSSWALK MARKING
W/ LONGITUDINAL STRIPES
N.T.S.

DTCRWLKM | 03/03/11

NOTE: ALL TRAFFIC FLOW ARROWS TO BE SOLID YELLOW REFLECTIVE TRAFFIC PAINT PER DIMENSIONS ABOVE.

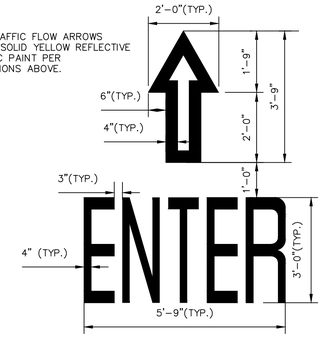

"ENTER" PAVEMENT MARKER W/ARROW
N.T.S.

DTENTER | 12/17/04

NOTE: ALL TRAFFIC FLOW ARROWS TO BE SOLID YELLOW REFLECTIVE TRAFFIC PAINT PER DIMENSIONS ABOVE.

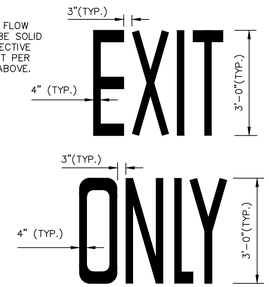

"EXIT ONLY" PAVEMENT MARKER
N.T.S.

DTEXIT | 7/31/13

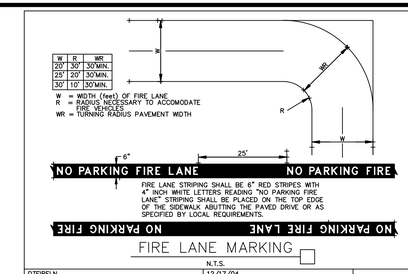

FIRE LANE MARKING
N.T.S.

DTFIRELN | 12/17/04

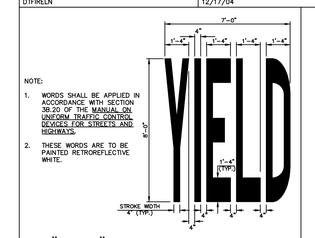

NOTE:

1. WORDS SHALL BE APPLIED IN ACCORDANCE WITH SECTION 3B.20 OF THE MANUAL ON UNIFORM TRAFFIC CONTROL DEVICES FOR STREETS AND HIGHWAYS.
2. THESE WORDS ARE TO BE PAINTED RETROREFLECTIVE WHITE.

"YIELD" PAVEMENT MARKING
N.T.S.

DTYIELDM | 03/04/11

NOTES:

1. WORDS AND ARROWS SHALL BE APPLIED IN ACCORDANCE WITH SECTION 3B.20 OF THE MANUAL ON UNIFORM TRAFFIC CONTROL DEVICES FOR STREETS AND HIGHWAYS.
2. THESE WORDS ARE TO BE PAINTED "RETROREFLECTIVE WHITE WITH GLASS BEADS", PER SPECIFICATIONS, WHEN AT EXITS FROM PARKING LOT TO PUBLIC STREETS.

"ONLY" PAVEMENT MARKING
AS INDICATED ON PLANS

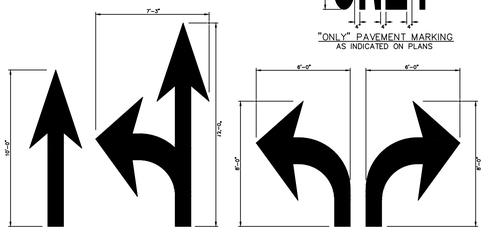

SOLID ARROW MARKINGS
AS INDICATED ON PLANS
PAINTED "RETROREFLECTIVE WHITE"

SOLID ARROW PAVEMENT MARKINGS
N.T.S.

DTRLTURN | 04/28/14

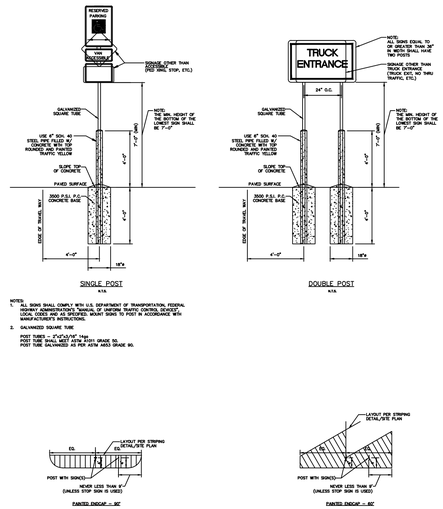

SINGLE POST
N.T.S.

DOUBLE POST
N.T.S.

NOTES:

1. ALL SIGNS SHALL COMPLY WITH U.S. DEPARTMENT OF TRANSPORTATION, FEDERAL HIGHWAY ADMINISTRATION'S "MANUAL OF UNIFORM TRAFFIC CONTROL DEVICES", LOCAL CODES AND AS SPECIFIED. MOUNT SIGNS TO POST IN ACCORDANCE WITH MANUFACTURER'S INSTRUCTIONS.
2. GALVANIZED SQUARE TUBE

   POST TUBES – 2"x2"x3/16" 14ga
   POST TUBE SHALL MEET ASTM A1011 GRADE 50.
   POST TUBE GALVANIZED AS PER ASTM A653 GRADE 90.

SIGN LOCATIONS – 90° PARKING

SIGN LOCATIONS – 60° PARKING

SIGN MOUNTING AND BASE WITH BOLLARD
(USE WHERE SIGN IS NOT WITHIN CURBED ISLAND)
N.T.S.

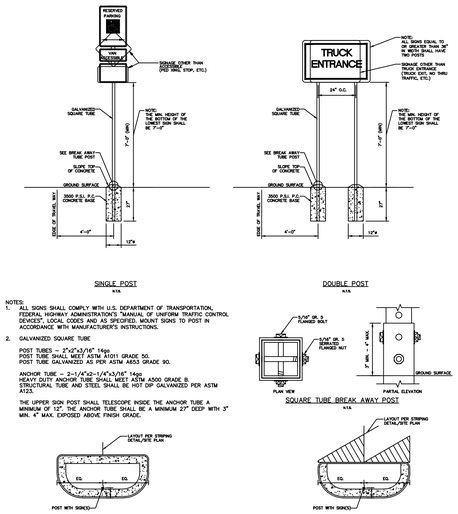

SINGLE POST
N.T.S.

DOUBLE POST
N.T.S.

NOTES:

1. ALL SIGNS SHALL COMPLY WITH U.S. DEPARTMENT OF TRANSPORTATION, FEDERAL HIGHWAY ADMINISTRATION'S "MANUAL OF UNIFORM TRAFFIC CONTROL DEVICES", LOCAL CODES AND AS SPECIFIED. MOUNT SIGNS TO POST IN ACCORDANCE WITH MANUFACTURER'S INSTRUCTIONS.
2. GALVANIZED SQUARE TUBE

   POST TUBES – 2"x2"x3/16" 14ga
   POST TUBE SHALL MEET ASTM A1011 GRADE 50.
   POST TUBE GALVANIZED AS PER ASTM A653 GRADE 90.

   ANCHOR TUBE – 2-1/4"x2-1/4"x3/16" 14ga
   HEAVY DUTY ANCHOR TUBE SHALL MEET ASTM A500 GRADE B STRUCTURAL TUBE AND STEEL SHALL BE HOT DIP GALVANIZED PER ASTM A123.

   THE UPPER SIGN POST SHALL TELESCOPE INSIDE THE ANCHOR TUBE A MINIMUM OF 12". THE ANCHOR TUBE SHALL BE A MINIMUM 27" DEEP WITH 3" MIN. 4" MAX. EXPOSED ABOVE FINISH GRADE.

SIGN LOCATIONS – 90° PARKING

SIGN LOCATIONS – 60° PARKING

SIGN MOUNTING AND BASE WITHOUT BOLLARD
(USE WHERE SIGN IS WITHIN CURBED ISLAND)
N.T.S.

SIGN MOUNTING AND BASE
N.T.S.

12/06/11 | DTSIGNB

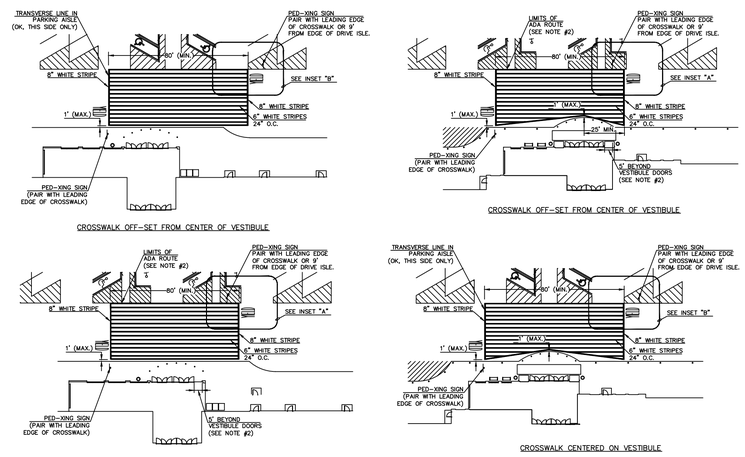

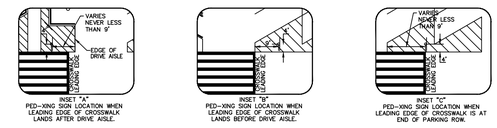

NOTES:

1. REFERENCE EACH VESTIBULE ON THE SITE PLAN FOR FINAL LAYOUT, DIMENSIONS AND SIGN LOCATION.
2. TRANSVERSE LINE OF CROSSWALK SHALL BE LOCATED AT END OF PARKING STALL, LIMITS OF ADA ROUTE OR 5' BEYOND VESTIBULE DOORS. TRANSVERSE LINE (FOR TRAFFIC MOVING RIGHT TO LEFT PER THIS DETAIL) CAN'T END IN A PARKING AISLE ON THE PARKING LOT SIDE OF THE FRONT DRIVE.
3. SEE INSETS "A", "B" AND "C" FOR SIGN LOCATION FOR EACH OF THE THREE OPTIONS.

VESTIBULE CROSSWALK STRIPING
N.T.S.

DTVXWALK | 04/12/13

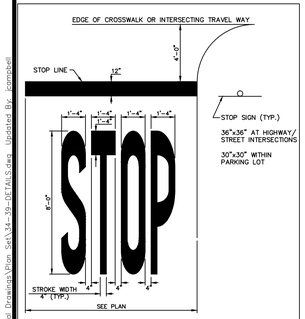

NOTE:

1. WORDS AND LINES SHALL BE APPLIED IN ACCORDANCE WITH SECTIONS 3B.16 AND 3B.20 OF THE MANUAL ON UNIFORM TRAFFIC CONTROL DEVICES FOR STREETS AND HIGHWAYS.
2. THESE WORDS AND BAR ARE TO BE PAINTED RETROREFLECTIVE WHITE.

STOP SIGNAGE AND MARKING
N.T.S.

DTSTOPBR | 03/04/11

Manhard CONSULTING LTD
800 Woodlands Parkway, Vernon Hills, IL 60061 ph847.634.5550 fx847.634.0095 manhard.com
Civil Engineers • Surveyors • Water Resource Engineers • Water & Wastewater Engineers
Construction Managers • Environmental Scientists • Landscape Architects • Planners

DATE	REVISIONS	DRAWN BY
8-13-14	REVISED PER CITY COMMENTS	DSK

PROPOSED WAL-MART SUPERCENTER NO. 1176-06

CITY OF STOUGHTON, DANE COUNTY, WISCONSIN

CONSTRUCTION DETAILS

PROJ. MGR.: TTR
PROJ. ASSOC.: RJS
DRAWN BY: AS
DATE: 5-29-14
SCALE: N.T.S.

SHEET 37 OF 39

WALSTWI 130435

© 2012 MANHARD CONSULTING, LTD. ALL RIGHTS RESERVED

December 18, 2014 16:19 Date Name: G:\Winnie\Acad\Civil\Final Drawings\Plan Set\34-70-DETAILS.dwg Updated By: tomahall