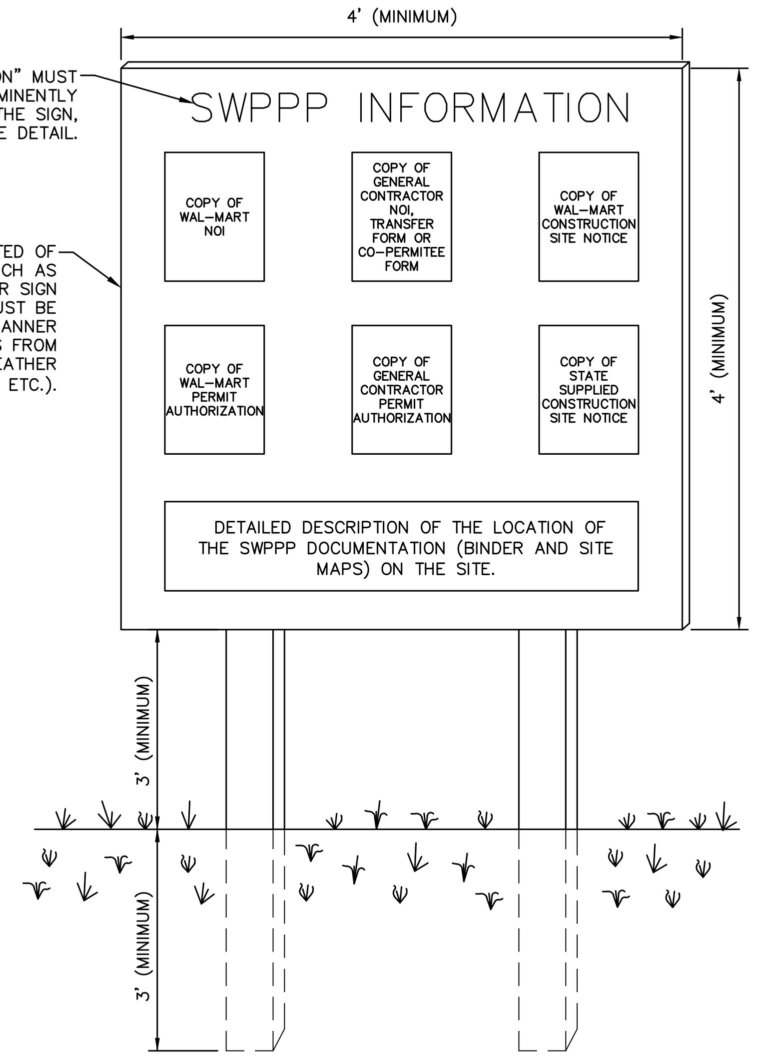

NOTES:

1. THE SWPPP INFORMATION SIGN MUST BE LOCATED IN A PROMINENT, PUBLICLY ACCESSIBLE LOCATION NEAR THE MAIN ENTRANCE OF THE SITE, SUCH THAT THE DOCUMENTATION CAN BE READ WITHOUT ACCESSING THE JOBSITE, BUT NOT OBSTRUCTING VIEWS AS TO CAUSE A TRAFFIC SAFETY HAZARD.
2. ALL POSTED DOCUMENTS MUST BE MAINTAINED IN A CLEARLY READABLE CONDITION AT ALL TIMES THROUGHOUT CONSTRUCTION AND UNTIL THE NOTICE-OF-TERMINATION (NOT) IS FILED FOR THE PERMIT.
3. ALL PAGES OF NOTICES OF INTENT AND PERMIT AUTHORIZATIONS MUST BE POSTED. THE CONTRACTOR MAY UTILIZE ACCESSIBLE WATERPROOF FOLDERS TO STORE THESE DOCUMENTS IF IT WILL BE DIFFICULT TO POST ALL PAGES INDIVIDUALLY.
4. CONTRACTOR SHALL POST OTHER STORMWATER AND/OR EROSION AND SEDIMENT CONTROL RELATED PERMITS ON THE SIGN AS REQUIRED BY THE GOVERNING AGENCIES. **[ADD ANY OTHER APPLICABLE ITEMS HERE.]**
5. SUBSEQUENT PERMIT MODIFICATION REQUESTS OR RENEWAL APPLICATIONS AND THEIR ASSOCIATED AUTHORIZATIONS OR RESPONSES SHALL BE POSTED ON THE SWPPP SIGN.
6. SIGN SHALL BE LOCATED OUTSIDE OF PUBLIC RIGHT-OF-WAY AND EASEMENTS UNLESS APPROVED BY THE GOVERNING AGENCY.
7. CONTRACTOR IS RESPONSIBLE FOR ENSURING STABILITY OF THE SWPPP INFORMATION SIGN.

(SS) SWPPP INFORMATION SIGN

N.T.S.

WAL-MART STANDARD DETAIL

LAST REVISED: JUNE 2012

DANDY CURB SACK™

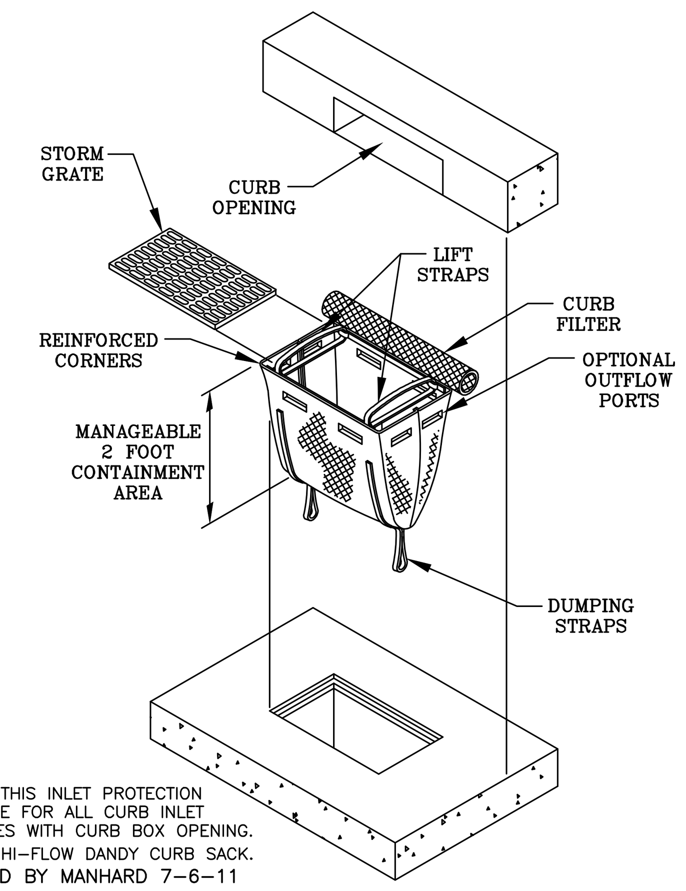

NOTES:
1. USE THIS INLET PROTECTION DEVICE FOR ALL CURB INLET GRATES WITH CURB BOX OPENING.
2. USE HI-FLOW DANDY CURB SACK.
MODIFIED BY MANHARD 7-6-11

(IP2) DANDY CURB SACK INLET PROTECTION

MANUFACTURER STANDARD DETAIL

FLEXSTORM CATCH-IT FILTERS FOR TEMPORARY INLET PROTECTION PRODUCT SELECTION AND SPECIFICATION DRAWING

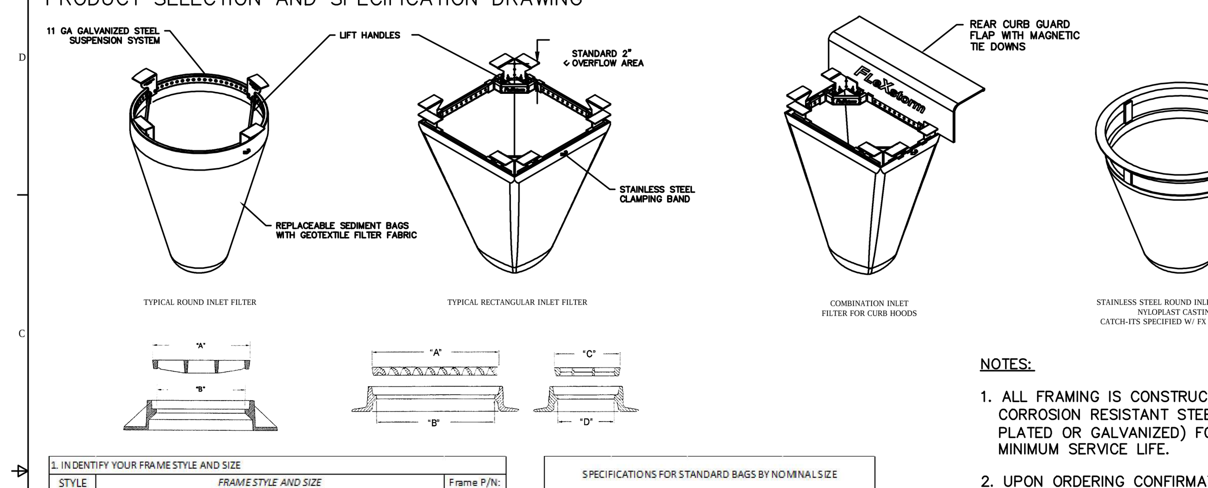

1. INDENTIFY YOUR FRAME STYLE AND SIZE		
STYLE	*FRAME STYLE AND SIZE*	Frame P/N:
ROUND	Small Round (up to 20.0" dia grates (A) dim)	62SRD
	Med Round (20.1" - 26.0" dia grates (A) up to 25" dia openings (B))	62MRD
	Large Round (26.1" - 32.0" dia grates (A) up to 30" openings (B))	62LRD
	XL Round (32.1" dia - 39" dia grates (A) up to 37" dia openings (B))	62XLRD
RECT/ SQUARE	Small Rect / Square (up to 16" (B) x 16" (D) openings or 64" perimeter)	62SSQ
	Med Rect / Square (up to 24" (B) x 24" (D) openings or 96" perimeter)	62MSQ
	Large Rect / Square (up to 36" (B) x 24" (D) openings or 120" perimeter)	62LSQ
	XL Rect / Square (side by side 2 pc set to fit up to 48" (B) x 36" (D) openings)	62XLSQ
COMBO INLETS	Small Rect / Square (ref Rect sizing; shipped with Magnetic Curb Flaps)	62SCB
	Med Rect / Square (ref Rect sizing; shipped with Magnetic Curb Flaps)	62MCB
	Large Rect / Square (ref Rect sizing; shipped with Magnetic Curb Flaps)	62LCB
	XL Rect / Square (ref Rect sizing; shipped with Magnetic Curb Flaps)	62XLCB
NYLOPLAST	12" diameter Nyloplast castings (Stainless Steel Framing standard)	6212NY
	15" diameter Nyloplast castings (Stainless Steel Framing standard)	6215NY
	18"diameter Nyloplast castings (Stainless Steel Framing standard)	6218NY
	24" diameter Nyloplast castings (Stainless Steel Framing standard)	6224NY
	30" diameter Nyloplast castings (Stainless Steel Framing standard)	6230NY

SPECIFICATIONS FOR STANDARD BAGS BY NOMINAL SIZE			
Nominal Bag	Solids Storage	Filtered Flow Rate at 50% Max (CFS)	
Size	(CuFt)	FX (Woven)	IL (NonWoven)
Small	1.6	1.2	0.9
Medium	2.1	1.7	1.3
Large	3.8	2.7	1.9
XL	4.2	3.6	2.6

2. SELECT YOUR BAG PART NUMBER				
FLEXSTORM FILTER BAGS	(22" depth) STD Bag P/N	(12" depth) Short Bag P/N	Clean Water Flow Rate (GPM/SqFt)	Min A.O.S. (US Sieve)
FX: Standard Woven Bag	FX	FX-S	200	40
IL: IDOT Non-Woven Bag	IL	IL-S	145	70

3. CREATE YOUR FLEXSTORM INLET FILTER PART NUMBER

Frame P/N from Step 1. Filter Bag P/N from Step 2.

NOTES:

1. ALL FRAMING IS CONSTRUCTED OF CORROSION RESISTANT STEEL (ZINC PLATED OR GALVANIZED) FOR 7 YEAR MINIMUM SERVICE LIFE.
2. UPON ORDERING CONFIRMATION OF THE DOT CALLOUT, PRECAST OR CASTING MAKE AND MODEL, OR DETAILED DIMENSIONAL FORMS MUST BE PROVIDED TO CONFIGURE AND ASSEMBLE YOUR CUSTOMIZED FLEXSTORM INLET FILTER. PART NUMBER ALONE IS NOT SUFFICIENT.
3. FOR WRITTEN SPECIFICATIONS AND MAINTENANCE GUIDELINES VISIT WWW.INLETFILTERS.COM

INSTALLATION:

1. REMOVE GRATE
2. DROP FLEXSTORM INLET FILTER ONTO LOAD BEARING LIP OF CASTING OR CONCRETE STRUCTURE
3. REPLACE GRATE

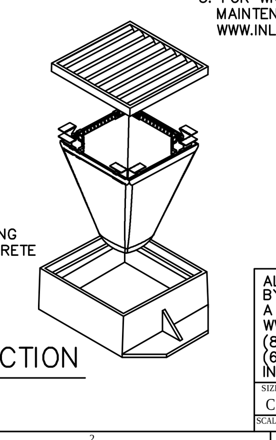

ALL PRODUCTS MANUFACTURED BY INLET & PIPE PROTECTION, INC
A DIVISION OF ADS, INC.
WWW.INLETFILTERS.COM
(866) 287-8655 PH
(630) 355-3477 FX
INFO@INLETFILTERS.COM

SIZE	DWG NO	REV
C	FLEXSTORM_CATCH_IT	A
SCALE	SHEET 1 OF 1	

(IP3) INLET PROTECTION

MANUFACTURER STANDARD DETAIL

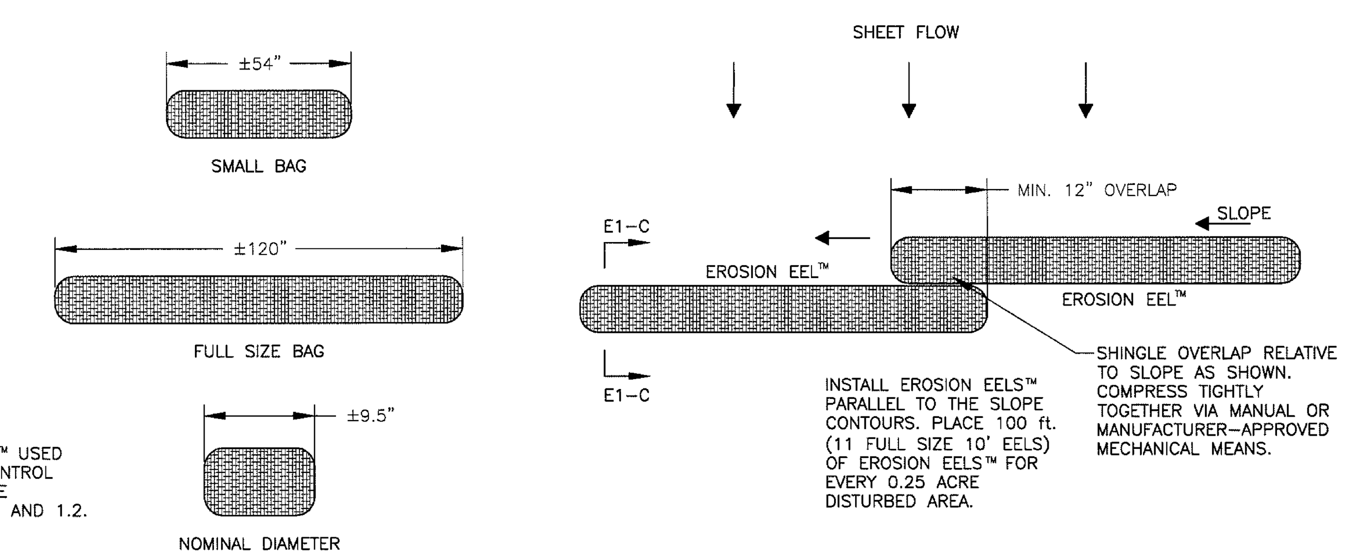

INSTALL EROSION EELS™ PARALLEL TO THE SLOPE CONTOURS. PLACE 100 ft. (11 FULL SIZE 10' EELS) OF EROSION EELS™ FOR EVERY 0.25 ACRE DISTURBED AREA.

NOTE:
ALL EROSION EELS™ USED FOR PERIMETER CONTROL SHALL USE MIXTURE SPECIFICATIONS 1.1 AND 1.2.

EROSION EEL DETAIL

MANUFACTURER STANDARD DETAIL

GENERAL NOTES

1. EROSION EELS™ USED IN PERIMETER CONTROL APPLICATIONS SHALL HAVE A SPECIFICATION MIXTURE 1.0 OR 2.0.
   A. MIXTURE SPECIFICATION 1.0. A FILTER MATERIAL COMPRISED OF 100% RUBBER SHREDS. THE RUBBER SHALL BE DERIVED FROM RECYCLED TIRES AND SHALL BE SHREDDED TO PRODUCE A MAXIMUM PARTICLE SIZE OF +/- 3/4 INCH.
   B. MIXTURE SPECIFICATION 2.0. A FILTER MIXTURE COMPRISED OF 100% SHREDDED RUBBER DERIVED FROM RECYCLED TIRES. MAXIMUM PARTICLE SIZE IS ±2 INCHES.
2. LENGTHS OF EROSION EELS™ SHALL BE EITHER A NOMINAL +/-10 FT. OR +/- 4.5 FT. NOMINAL DIAMETER SHALL BE +/-9.5 INCHES FOR PERIMETER CONTROLS AND +/-20 INCHES FOR CHECK DAM APPLICATIONS.
3. EROSION EELS™ CAN BE PLACED AT THE TOP, ON THE FACE, OR AT THE TOE OF SLOPES TO INTERCEPT RUNOFF, REDUCE FLOW VELOCITY, RELEASE THE RUNOFF AS SHEET FLOW AND PROVIDE REMOVAL OF™ SEDIMENT FROM THE RUNOFF.
4. EROSION EELS™ SHALL BE INSTALLED ALONG THE GROUND CONTOUR, AT THE TOE OF SLOPES, AT AN ANGLE TO THE CONTOUR TO DIRECT FLOW AS A DIVERSION BERM, AROUND INLET STRUCTURES, IN A DITCH AS A CHECK DAM TO HELP REDUCE SUSPENDED SOLIDS LOADING AND RETAIN SEDIMENT, OR AS A GENERAL FILTER FOR ANY DISTURBED SOIL AREA.
5. NO TRENCHING IS REQUIRED FOR INSTALLATION OF EROSION EELS™
6. PREPARE BED FOR EEL INSTALLATION BY REMOVING ANY LARGE DEBRIS INCLUDING ROCKS, SOIL CLODS, AND WOODY VEGETATION. EROSION EELS CAN ALSO BE PLACED OVER PAVED SURFACES INCLUDING CONCRETE AND ASPHALT WITH NO SURFACE PREPARATION REQUIRED.
7. RAKE BED AREA WITH A HAND RAKE OR BY DRAG HARROW.
8. DO NOT PLACE EEL DIRECTLY OVER RILL AND GULLIES UNTIL AREA HAS BEEN HAND-EXCAVATED AND RAKED TO PROVIDE A LEVEL BEDDING SURFACE. ALL SURFACES SHALL BE UNIFORMLY COMPACTED FOR MAXIMUM SEATING OF EELS IN PLACE.
9. FOR LOCATIONS WHERE EELS WILL BE PLACED IN CONCENTRATED FLOWS (SUCH AS CHECK DAMS, INLET PROTECTION) AND FOR PERIMETER CONTROLS AT PRIMARY DISCHARGE LOCATIONS, BED THE EELS IN A JUTE MESH CRADLE PER THE DETAILED DRAWINGS.
10. FOR DITCH APPLICATIONS, THE MAXIMUM DRAINAGE AREA SHALL BE 10 ACRES.
11. IF MORE THAN ONE EROSION EEL™ IS PLACED IN A ROW, PREPARE JOINTS PER DETAIL E1-B1.
12. EROSION EELS™ SHALL REMAIN IN PLACE UNTIL FULLY ESTABLISHED VEGETATION HAS COMPLETELY DEVELOPED OR UNTIL THE STORAGE CAPACITY/FUNCTIONAL LIFE OF THE EEL HAS BEEN EXHAUSTED (REQUIRING REPLACEMENT WITH NEW EELS).
13. ANCHORING POSTS FOR CHECK DAM APPLICATIONS SHALL HAVE A MINIMUM WEIGHT OF 1.25 LBS/FT STEEL T-POSTS (5 TO 7 FT. LENGTHS) ROLLED FROM HIGH CARBON STEEL. POSTS SHOULD BE HOT-DIP GALVANIZED OR COATED WITH A WEATHER-RESISTANT PAINT FOR STEEL APPLICATION. POSTS SHOULD BE EQUIPPED WITH A METAL ANCHOR PLATE. INSTALL PER DETAILS ON THIS SHEET.
14. PLACE T-POSTS THROUGH HANDLE OF BAGS. DO NOT DRIVE POSTS THROUGH EROSION EELS . T-POSTS ARE TO BE EMBEDDED A MINIMUM OF 3 FT. INTO GROUND ON STEEP SLOPES GREATER THAN 25%.

PERFORMANCE STANDARDS:

1. ALL SITE ACCESS MUST BE CONFINED TO THE CONSTRUCTION EXIT(S). BARRICADE TO PREVENT USE OF ANY LOCATIONS OTHER THAN THE CONSTRUCTION EXIT(S) WHERE VEHICLES OR EQUIPMENT MAY ACCESS THE SITE.
2. CONTRACTOR TO LOCATE TEMPORARY CONSTRUCTION FENCING, JERSEY BARRIERS, OR BOTH ALONG THE SIDES OF THE CONSTRUCTION EXIT TO PREVENT CONSTRUCTION TRAFFIC FROM SHORT CIRCUITING/BYPASSING THE EXIT.
3. PROVIDE SEDIMENT TRAP ON DOWN GRADIENT SIDE (OR BOTH SIDES) AS REQUIRED. SEDIMENT TRAP SHALL BE LOCATED OUTSIDE OF THE RIGHT-OF-WAY AND AT A MINIMUM SETBACK DISTANCE AS REQUIRED PER LOCAL JURISDICTION.
4. IF THE ACTION OF VEHICLES TRAVELING OVER THE GRAVEL CONSTRUCTION EXIT(S) IS NOT SUFFICIENT TO PREVENT TRACKING OF DIRT, DUST OR MUD, THEN TIRES MUST BE WASHED BEFORE THE VEHICLES ENTER A PUBLIC ROAD. ALL WASH WATER MUST BE ROUTED TO A SEDIMENT TRAP OR OTHER TREATMENT AREA AND SHALL NOT BE DIRECTLY DISCHARGED OFF-SITE.
5. LOCATIONS WHERE VEHICLES ENTER AND EXIT THE SITE MUST BE INSPECTED FOR EVIDENCE OF SEDIMENT TRACKING BEYOND THE PERMITTED PROJECT AREA. ALL MATERIALS SPILLED, DROPPED, WASHED OR TRACKED FROM VEHICLES ONTO ROADWAYS OR INTO STORM DRAINS MUST BE REMOVED IMMEDIATELY.
6. ANY SEDIMENT DEPOSITED ON THE ROADWAY SHALL BE SWEPT AS NECESSARY (AND WITHIN THE SAME DAY AS DISCOVERY) AND DISPOSED OF IN AN APPROPRIATE MANNER. SEDIMENT SHALL <u>NOT</u> BE WASHED INTO STORM SEWER SYSTEMS.
7. EXIT(S) SHALL BE MAINTAINED IN A CONDITION WHICH WILL PREVENT TRACKING OR FLOW OF MUD BEYOND THE EXIT(S). THIS MAY REQUIRE PERIODIC TOP DRESSING OF THE CONSTRUCTION EXIT(S) AS CONDITIONS DEMAND.
8. CONTRACTOR SHALL BE PERMITTED TO TURN THE STONE WHEN THE SURFACE BECOMES SMOOTH AND SURFACE VOIDS ARE FILLED TO MAINTAIN EFFECTIVENESS OF CONSTRUCTION EXIT UNTIL SUCH TIME THAT VOIDS BELOW THE SURFACE BECOME FILLED AND THE CONSTRUCTION EXIT IS NO LONGER EFFECTIVE. AT SUCH A TIME THE CONTRACTOR SHALL REMOVE THE INEFFECTIVE STONE AND REPLACE PER DETAIL.
9. IF EXIT BMP IS STILL INEFFECTIVE, GC MUST CONTACT THE ENGINEER AND SUBMIT AN RFI AS NECESSARY.

<u>NOTE TO GC</u>: THE GOAL OF A CONSTRUCTION EXIT AND ASSOCIATED WHEEL WASH AREAS IS TO ELIMINATE TRACK OUT. SIMPLY MANAGING TRACK OUT THROUGH DESIGNATED OR CONTINUAL STREET SWEEPING IS NOT AN ACCEPTABLE PRACTICE. WHILE STREET SWEEPING IS AN ACCEPTABLE PRACTICE FOR REMOVING DUST AND MINIMAL AMOUNTS OF FINE SEDIMENT, OBSERVABLE TRACK OUT FROM THE PROJECT SHOULD TRIGGER THE USE OF ADDITIONAL MEASURES (WHEEL WASH), CONSIDERATION OF ALTERNATE EXITS, OR DISCONTINUING VEHICLE TRAFFIC UNTIL CONDITIONS ON-SITE HAVE IMPROVED. TRACK OUT IS A SEDIMENT RELEASE. ALL SEDIMENT RELEASES MUST BE REPORTED TO THE SWCT VIA THE ONLINE CRITICAL INCIDENT REPORT.

(CE) CONSTRUCTION EXIT

WAL-MART STANDARD DETAIL

LAST REVISED: JUNE 2013

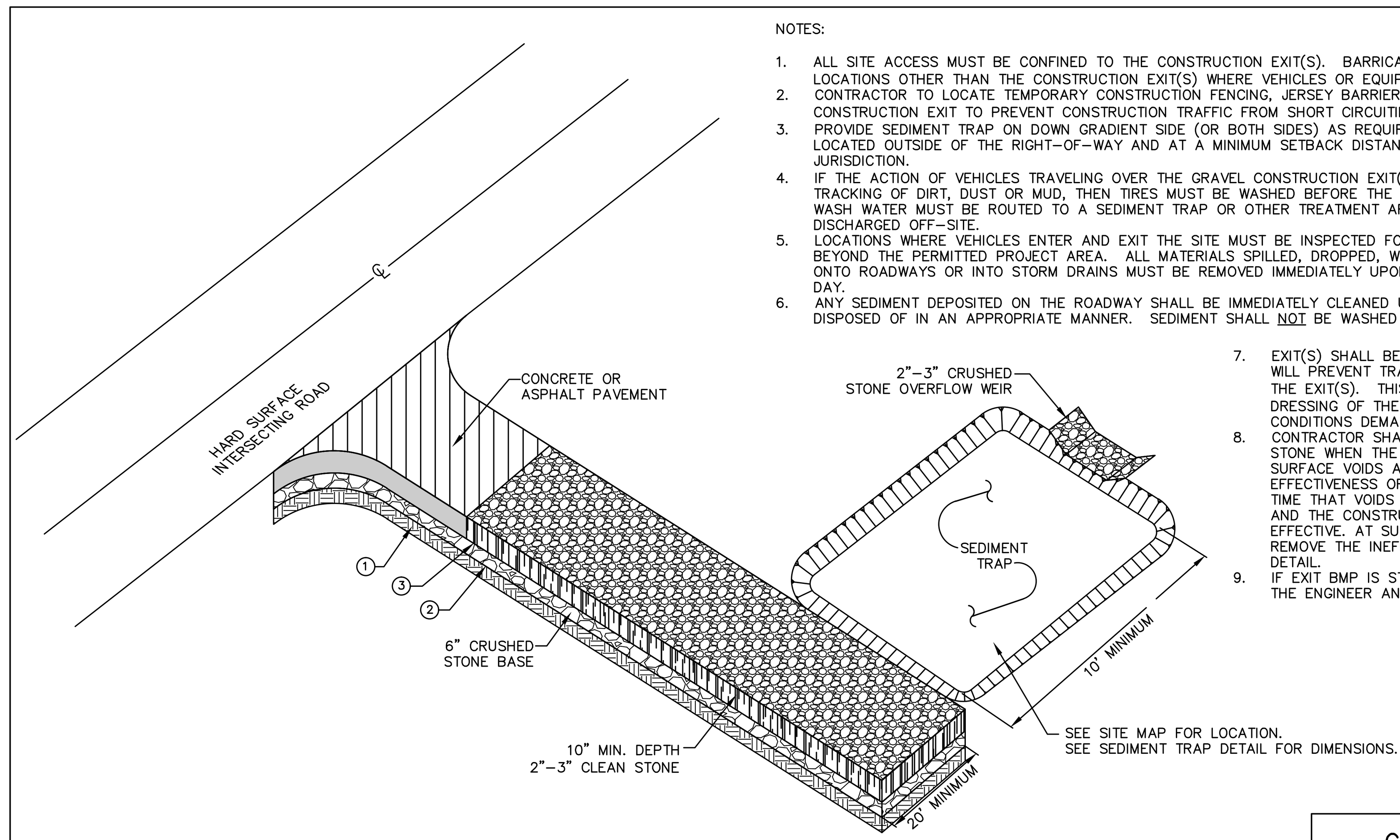

PLAN VIEW

NOTES:

1. ALL SITE ACCESS MUST BE CONFINED TO THE CONSTRUCTION EXIT(S). BARRICADE TO PREVENT USE OF ANY LOCATIONS OTHER THAN THE CONSTRUCTION EXIT(S) WHERE VEHICLES OR EQUIPMENT MAY ACCESS THE SITE.
2. CONTRACTOR TO LOCATE TEMPORARY CONSTRUCTION FENCING, JERSEY BARRIERS, OR BOTH ALONG THE SIDES OF THE CONSTRUCTION EXIT TO PREVENT CONSTRUCTION TRAFFIC FROM SHORT CIRCUITING/BYPASSING THE EXIT.
3. PROVIDE SEDIMENT TRAP ON DOWN GRADIENT SIDE (OR BOTH SIDES) AS REQUIRED. SEDIMENT TRAP SHALL BE LOCATED OUTSIDE OF THE RIGHT-OF-WAY AND AT A MINIMUM SETBACK DISTANCE AS REQUIRED PER LOCAL JURISDICTION.
4. IF THE ACTION OF VEHICLES TRAVELING OVER THE GRAVEL CONSTRUCTION EXIT(S) IS NOT SUFFICIENT TO PREVENT TRACKING OF DIRT, DUST OR MUD, THEN TIRES MUST BE WASHED BEFORE THE VEHICLES ENTER A PUBLIC ROAD. ALL WASH WATER MUST BE ROUTED TO A SEDIMENT TRAP OR OTHER TREATMENT AREA AND SHALL NOT BE DIRECTLY DISCHARGED OFF-SITE.
5. LOCATIONS WHERE VEHICLES ENTER AND EXIT THE SITE MUST BE INSPECTED FOR EVIDENCE OF SEDIMENT TRACKING BEYOND THE PERMITTED PROJECT AREA. ALL MATERIALS SPILLED, DROPPED, WASHED OR TRACKED FROM VEHICLES ONTO ROADWAYS OR INTO STORM DRAINS MUST BE REMOVED IMMEDIATELY UPON NOTICE AND AT THE END OF EACH DAY.
6. ANY SEDIMENT DEPOSITED ON THE ROADWAY SHALL BE IMMEDIATELY CLEANED UP IMMEDIATELY UPON NOTICE AND DISPOSED OF IN AN APPROPRIATE MANNER. SEDIMENT SHALL <u>NOT</u> BE WASHED INTO STORM SEWER SYSTEMS.
7. EXIT(S) SHALL BE MAINTAINED IN A CONDITION WHICH WILL PREVENT TRACKING OR FLOW OF MUD BEYOND THE EXIT(S). THIS MAY REQUIRE PERIODIC TOP DRESSING OF THE CONSTRUCTION EXIT(S) AS CONDITIONS DEMAND.
8. CONTRACTOR SHALL BE PERMITTED TO TURN THE STONE WHEN THE SURFACE BECOMES SMOOTH AND SURFACE VOIDS ARE FILLED TO MAINTAIN EFFECTIVENESS OF CONSTRUCTION EXIT UNTIL SUCH TIME THAT VOIDS BELOW THE SURFACE BECOME FILLED AND THE CONSTRUCTION EXIT IS NO LONGER EFFECTIVE. AT SUCH A TIME THE CONTRACTOR SHALL REMOVE THE INEFFECTIVE STONE AND REPLACE PER DETAIL.
9. IF EXIT BMP IS STILL INEFFECTIVE, GC MUST CONTACT THE ENGINEER AND SUBMIT AN RFI AS NECESSARY.

CEC MODIFIED DETAIL	CONSTRUCTION EXIT
	05-29-14 WALSTWI

TRUE DAM®

Installation and Maintenance Guidelines

Installation: Place True Dam® on ground with aggregate pouch on truck dock side near the inlet on which it will be installed. Open Velcro access pouch located on the truck dock side edge of the unit. If using optional absorbents, place absorbent sock in pouch and push to back of pouch. Fill pouch with aggregate to a level that will keep the unit in place during a rain event and create a seal between the True Dam® and the surface of the truck dock. Reseal Velcro access. Center the unit against the truck drain opening so that the wall side of the unit creates a seal with the curb and inlet structure. There should be an equal length of the True Dam overhanging on each side of the opening.

Maintenance: Remove all accumulated sediment and debris from surface and vicinity of unit after each storm event. If using optional oil absorbents; remove and replace absorbent pillow when near saturation.

TRUE DAM®

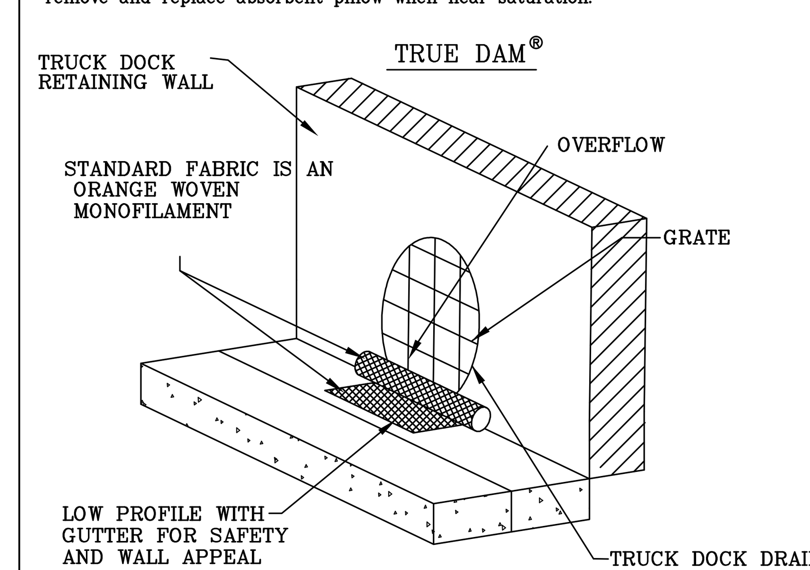

NOTES
1. PRODUCT TO BE INSTALLED AT TRUCK WELL DRAIN AS SHOWN ON SHEET 3.
2. AN APPROVED EQUAL MAY BE SUBSTITUTED.
* DETAIL MODIFIED BY MCL (12-17-04)

(IP4) TRUCK WELL INLET PROTECTION

CEC MODIFIED DETAIL	TRUE DAM
	05-29-14 WALSTWI

DEVELOPER/OWNER:
WAL-MART REAL ESTATE BUSINESS TRUST
MAIL STOP 5570
2001 SE 10TH STREET
BENTONVILLE, AR 72716-5570
479-204-1195

SITE OPERATOR/GENERAL CONTRACTOR:

SUPERINTENDENT:

IMPORTANT:
GC MUST SIGN ALL PLAN SHEETS AND ANY NEW PLAN SHEETS ISSUED BY THE CEC.

SEAL

DATE	REVISIONS	DRAWN BY
12-18-14	REVISED PER MANHARD REVIEW	MH
8-13-14	REVISED PER CITY COMMENTS	DDK

Manhard CONSULTING LTD
900 Woodlands Parkway, Vernon Hills, IL 60061 ph:847.634.5550 fx:847.634.0095 manhard.com
Civil Engineers • Surveyors • Water Resource Engineers • Water & Wastewater Engineers
Construction Managers • Environmental Scientists • Landscape Architects • Planners

PROPOSED WAL-MART SUPERCENTER NO. 1176-06
CITY OF STOUGHTON, DANE COUNTY, WISCONSIN
EROSION AND SEDIMENTATION CONTROL DETAILS

PROJ. MGR.: TTR
PROJ. ASSOC.: RJS
DRAWN BY: MH
DATE: 5-29-14
SCALE: N.T.S.

SHEET 7 OF 39
WALSTWI 130435

© 2012 MANHARD CONSULTING, LTD. ALL RIGHTS RESERVED

June 16, 2015 - 13:09 Dwg Name: P:\Walstwi\dwg\Eng\Final Drawings\Plan Set\02-03-06-09-SWPP-DETAILS.dwg Updated By: bwells